Top 100
Global
Innovator
for 10 years

SPD

Surge Protective Device

LS ELECTRIC

Surge Protective Device

- BK series (AC / DIN type)
- SP series (AC / Box type)
- BK series (DC / DIN type)
- SPD Disconnector

SPD

Surge Protective Device

The surge protector is used on an AC power system and protects the electric system from a surge over-voltage.

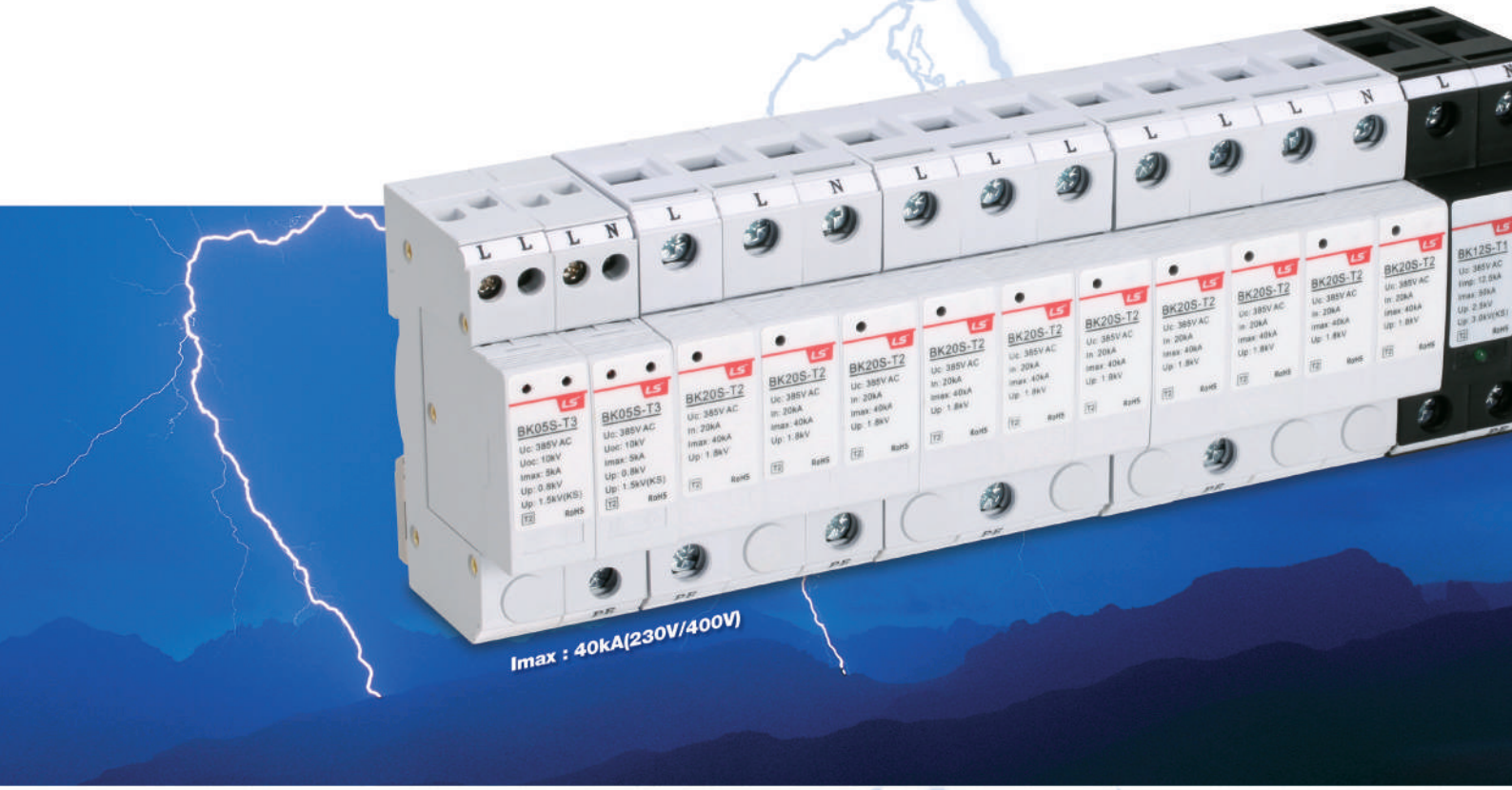

Contents

BK series (AC / DIN type)	
Product description/Product rating	4
External dimension/Installation wiring method	6
Ordering	9
Technical information	30

BK series (AC / DIN type)

Product description

The BK Series AC / DIN type surge protect protects a 50/60Hz electric system from surge voltages. Also, the system allows replacement of the protective element (MOV), ensuring convenience and economy. However, as only the protective module is provided, other components should be added when the system is installed in accordance with the site condition. When the protective device is activated (in an anomaly or an accident), the red lever in the status indicator protrudes.

Product rating 〈Uc: 385V〉

Item			AC Type					
			BK05S-T3	BK10S-T2	BK20S-T2	BK30S-T2	BK40S-T2	BK12S-T1 Note4)
No. of poles		[Pole]	2, 4P	1, 1+N, 2, 3, 3+N, 4P				
Rated voltages		Un [V]	230/440V					
Max. continued-operation voltage	Uc [V]	-	385	385	385	385	385	385
		N-PE		255	255	255	255	255
Voltage protection level	Up [kV]	-	≤0.8	≤1.5	≤1.8	≤2.0	≤2.5	≤2.5
		N-PE	-	≤1.0	≤1.2	≤1.5	≤2.0	≤2.5
	Up [kV] ㊀	-	≤2.0	≤1.5	≤1.8	-	≤2.5	-
		N-PE	-	≤2.5	≤2.5	-	≤3.5	-
Nominal discharge current		In [kA]		10	20	30	40	-
Max. discharge current		Imax [kA]	-	20	40	60	80	-
Impulse current		Iimp [kA]	-	-	-	-	-	12.5(10/350)
Open circuit voltage		Uoc [kV]	10	-	-	-	-	-
Grades	Test class		Class III	Class II				Class I (Built-in type)
Reaction time			< 25ns					
Status indication Note2)			Have Status indication					
Operating temperature range			-40℃~80℃					
Cross-sectional area of the connecting wires			6~16mm²	6~32mm²				16~32mm²
Accessories			AL Note3)					-
Standard			IEC 61643-11 / KS C IEC 61643-11 / UL1449					
Certification Note5)			CE, UL, KS, S	CE, UL, KS, S	CE, UL, KS, S	CE, UL	CE, UL, KS, S	CE

Note)
1. When the protective device is activated (in an anomaly or an accident) in products with Class II and III indication features, the red lever in the status indicator protrudes.
2. With a product with Class I indication feature, a green light will turn on when the protective device is in a normal condition. The green light will go off when the protective device is activated (for an anomaly or an accident.)
3. The AL contact accessories are not sole separately. You need to choose these accessories when you place your order for the product. Please be mindful of this fact when you place your order.
4. The Class I products are integrated with the MOVs, which cannot be detached.
5. Depending on the authentication will be separated by CE / KS or UL / S separate products. Please be mindful of this fact when you place your order.

Product description

The BK Series AC / DIN type surge protect protects a 50/60Hz electric system from surge voltages. Also, the system allows replacement of the protective element (MOV), ensuring convenience and economy. However, as only the protective module is provided, other components should be added when the system is installed in accordance with the site condition. When the protective device is activated (in an anomaly or an accident), the red lever in the status indicator protrudes.

Product rating (Uc: 460V)

Item			AC Type			
			BK10S-T2	BK20S-T2	BK30S-T2	BK40S-T2
No. of poles		[Pole]	1, 1+N, 2, 3, 3+N, 4P			
Rated voltages		Un [V]	254/440V			
Max. continued-operation voltage	Uc [V]	-	460	460	460	460
		N-PE	255	255	255	255
Voltage protection level	Up [kV]	-	≤1.5	≤2.0	≤2.2	≤2.5
		N-PE	≤1.0	≤1.2	≤1.5	≤2.0
	Up [kV] ㊀	-	-	-	-	-
		N-PE	-	-	-	-
Nominal discharge current		In [kA]	10	20	30	40
Max. discharge current		Imax [kA]	20	40	60	80
Impulse current		Iimp [kA]	-	-	-	-
Open circuit voltage		Uoc [kV]	-	-	-	-
Grades	Test class		Class II			
Reaction time			< 25ns			
Status indication Note2)			Have Status indication			
Operating temperature range			-40℃~80℃			
Cross-sectional area of the connecting wires			6~32mm²			
Accessories			AL Note3)			
Standard			IEC 61643-11, UL1449			
Certification Note4)			CE, S	CE, S, UL	CE, S, UL	CE, S, UL

Note)
1. When the protective device is activated (in an anomaly or an accident) in products with Class II and III indication features, the red lever in the status indicator protrudes.
2. With a product with Class I indication feature, a green light will turn on when the protective device is in a normal condition. The green light will go off when the protective device is activated (for an anomaly or an accident.)
3. The AL contact accessories are not sole separately. You need to choose these accessories when you place your order for the product. Please be mindful of this fact when you place your order.
4. Depending on the authentication will be separated by CE / KS or UL / S separate products. Please be mindful of this fact when you place your order.

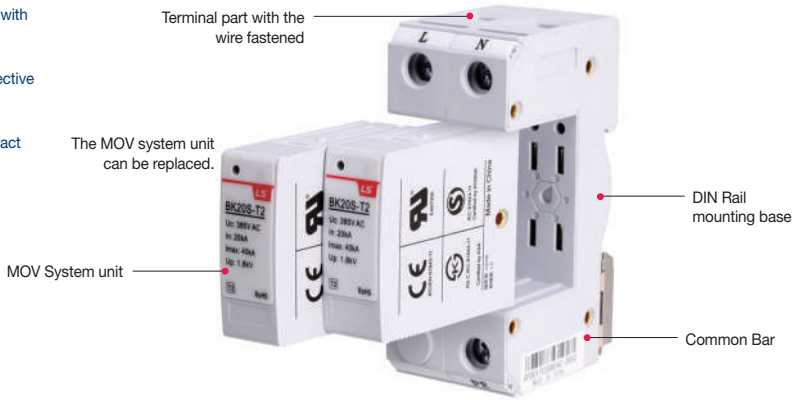

BK series (AC / DIN type)

External dimension

BK05S-T3

[Unit : mm]

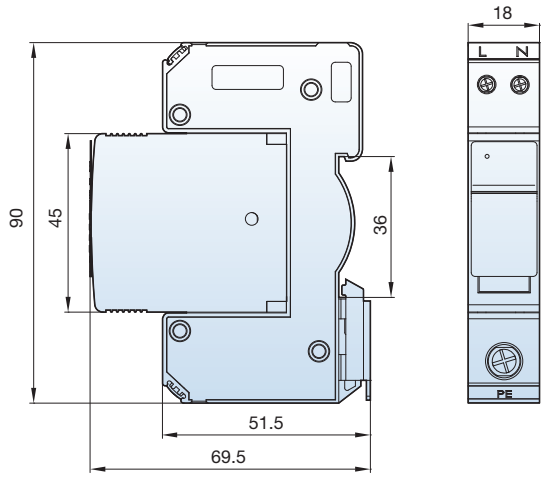

2P

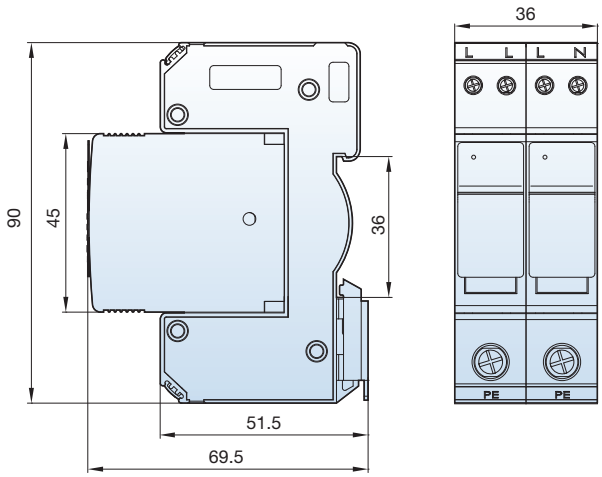

4P

Installation wiring method

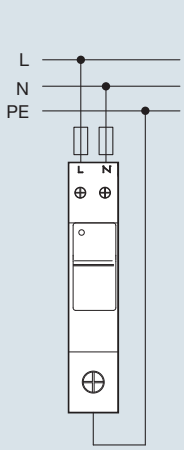

2P

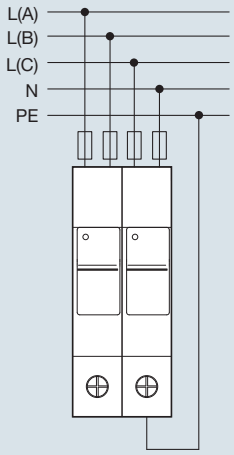

4P

Wiring diagram

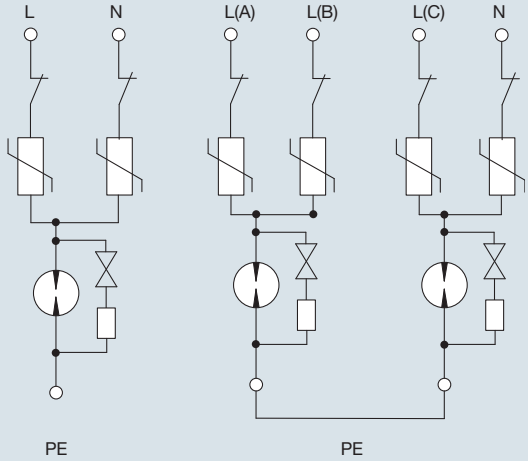

2P 4P

External dimension

BK10S/20S/30S/40S-T2

[Unit : mm]

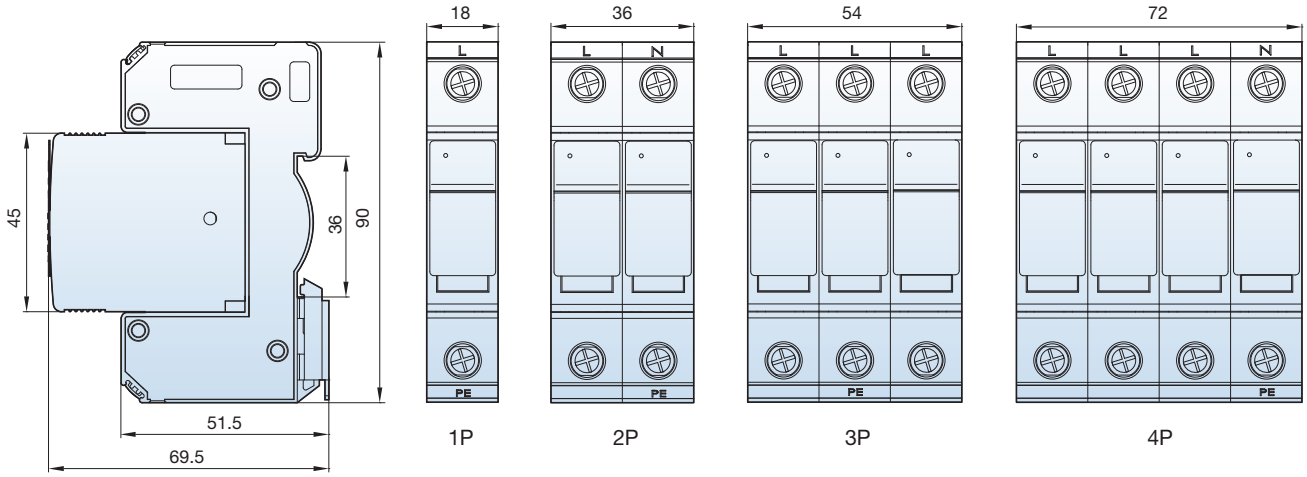

Installation wiring method

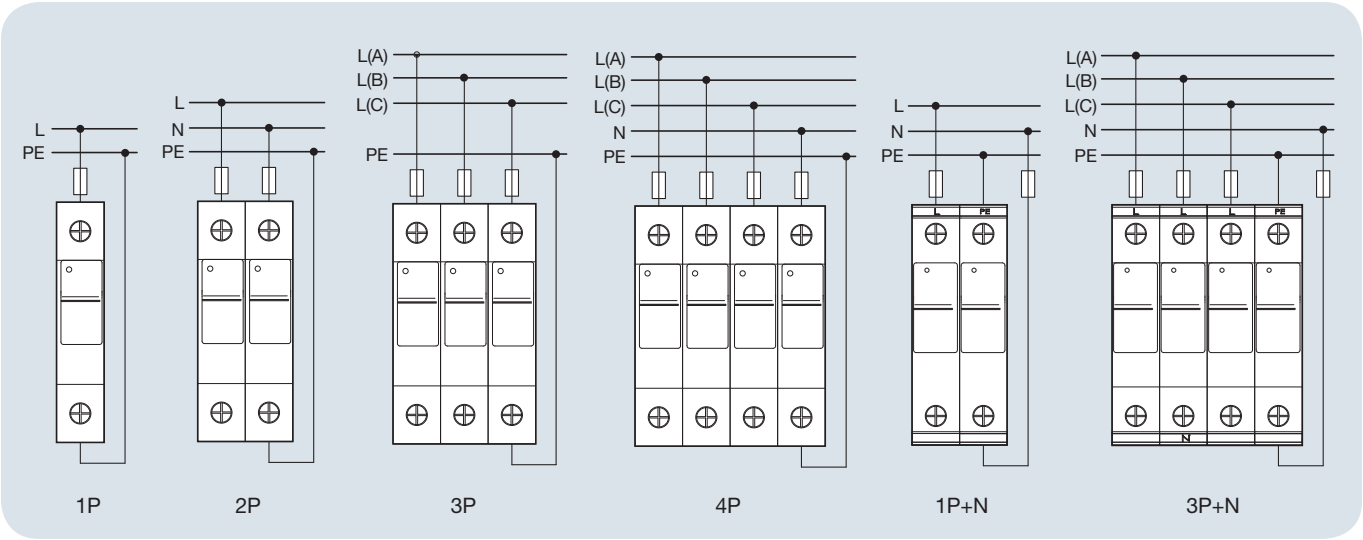

Wiring Diagram

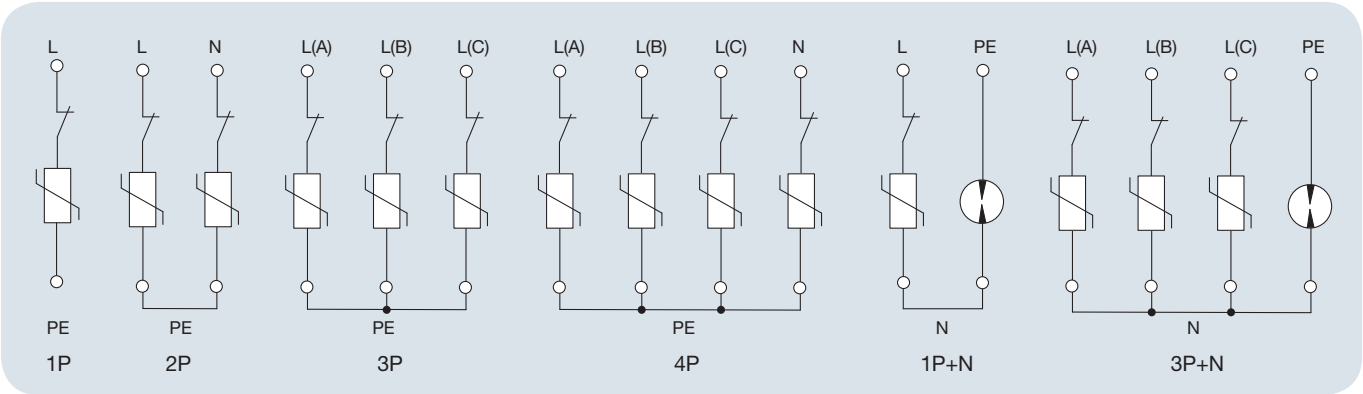

BK series (AC / DIN type)

External dimension

BK12S-T1

[Unit : mm]

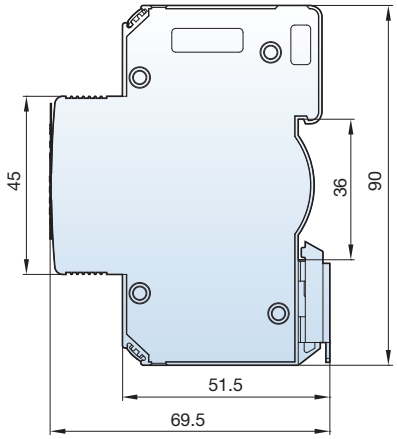

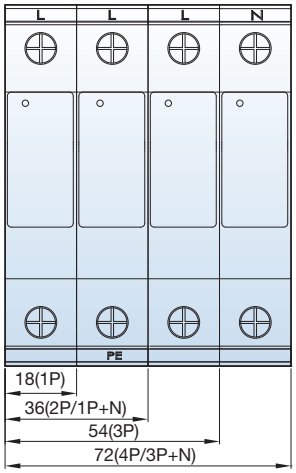

Installation wiring method

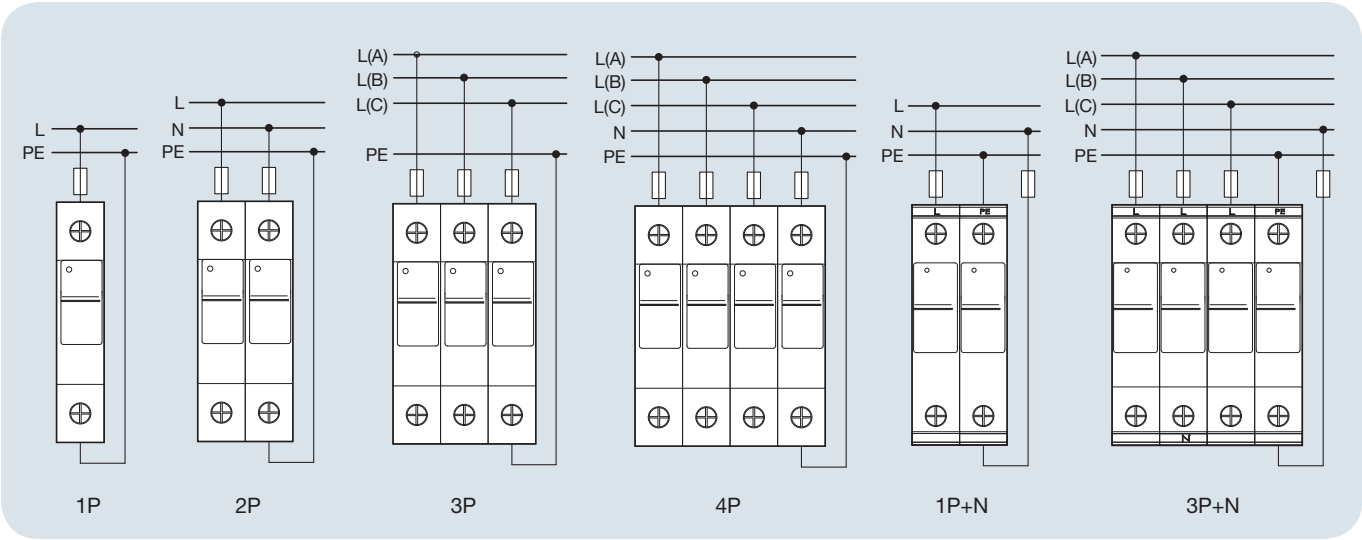

Wiring Diagram

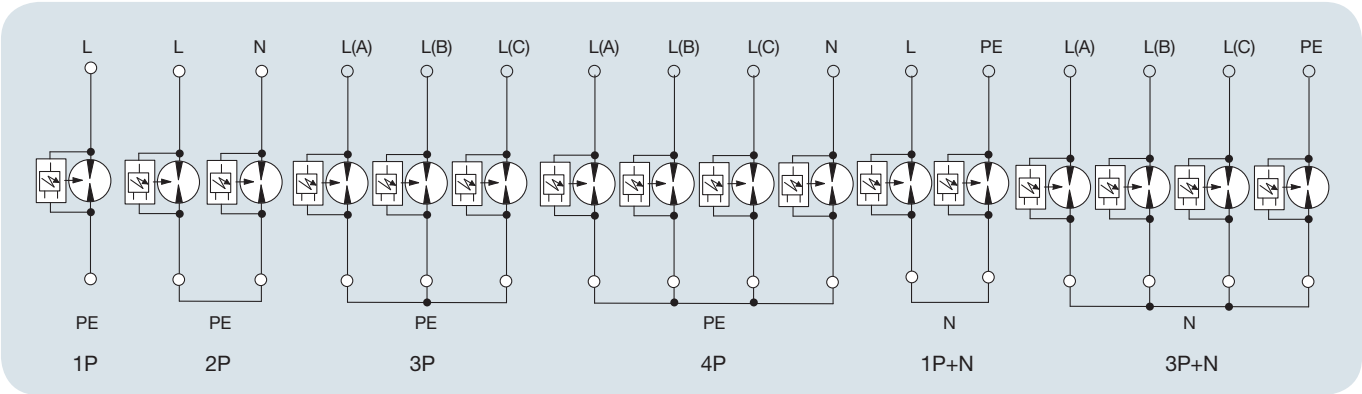

Ordering

BK – 20 S – T2 2P 385V 40kA AL CE/KS

Basic type	In/limp (kA)	Type		Class level		Poles	Uc	Imax	Option		Certification [5]	
BK	05 [1]	S	Din-rail	T1	Class I	1P	385V	10kV [3]	-	None	UL/S	CE, S-Mark, UL
	10			T2	Class II	2P	460V	20kA	AL	Alarm	CE/KS	CE, KS
	20			T3	Class III	3P		40kA				
	30					4P		60kA				
	40					1P+N		80kA				
	12.5 [2]					3P+N		50kA [4]				

* Note) 1. Class III product. Indicate as Imax 5kA.
2. Class I product. Indicate ate limp 12.5kA.
3. Class III product. Indicate as Uoc 10kV.
4. Class I product
5. Depending on the authentication separated into two products.

Memo

SPD

Surge Protective Device

The surge protector is used on an AC 50/60Hz, 220V/380V power system and protects the electric system from a surge over-voltage.

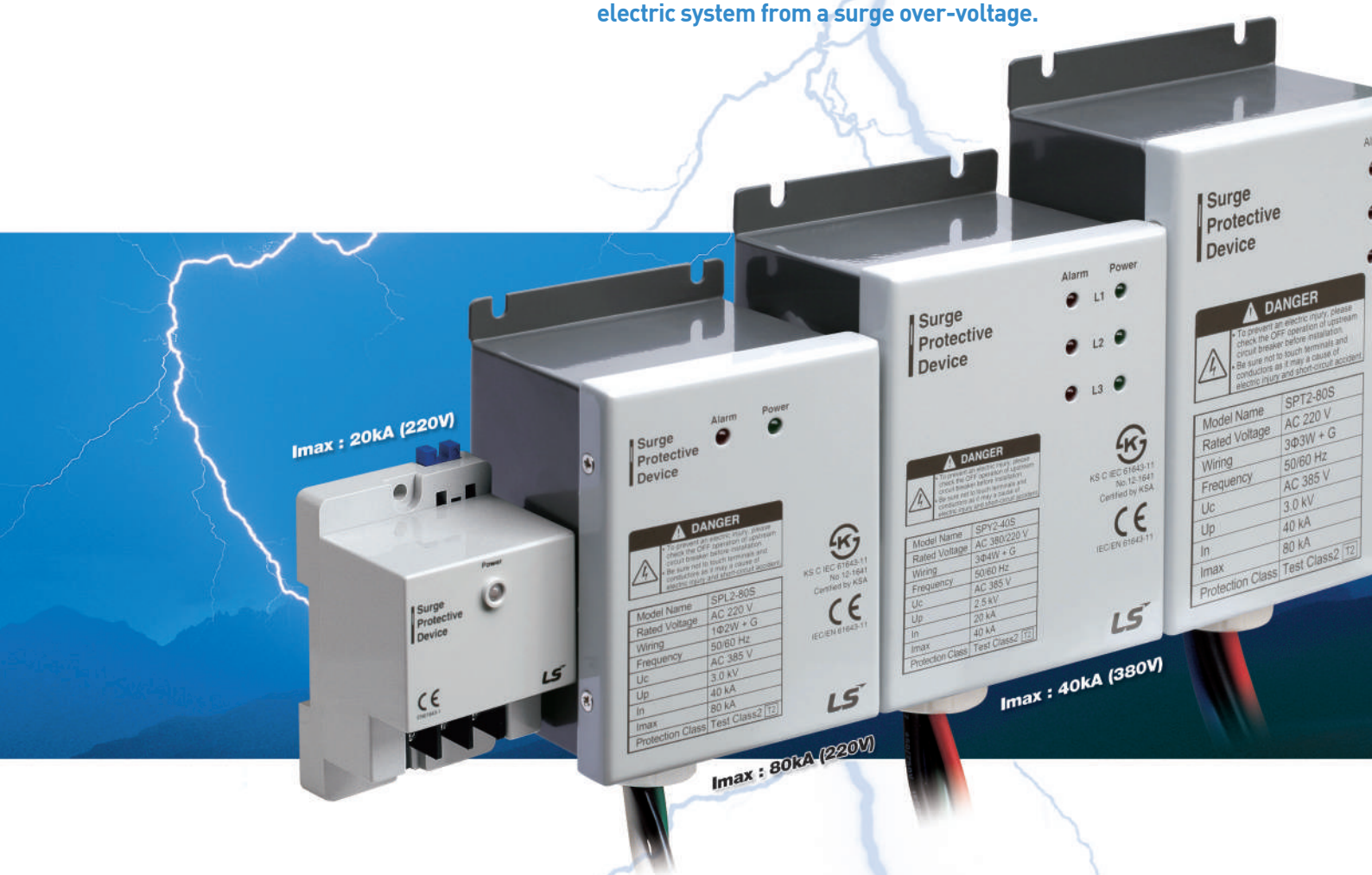

Contents

SP series (AC / Box type)

Product description/Product rating 12

External dimension 17

Ordering 22

Technical information 30

SP series (Box type)

Product description

The SP series surge protective device is applied to the alternating current 50/60Hz, 220V/380V power system and provides the protection from the surge overvoltage of an electric system. Moreover, the protection module, disconnectable device (fuse), and fastened power and ground wires are organized into the allin-one steel cabinet with convenient installation and stability.
If the protective device is normal, the display becomes green. The display becomes red after operation (abnormal or after an accident).

Product rating

- Single phase 2W+G (SPL)

SPD Type			SPL (AC 110V)
			SPL3-20S
Class			Class III
Rated system		[Pole]	2W+G
Rated voltage, Un	AC	[V]	110, 220
Max. continuous operating voltage, Uc	AC	[V]	275
Voltage protection level, Up		[kV]	1.5
Operation voltage, Uoc		[kV/kA]	20/10
Nominal discharge current, In (8/20㎲)		[kA, per mode]	-
Maximum discharge current, Imax (8/20㎲)		[kA, per mode]	-
Response time, t_A		[ns]	< 5 ns
Operating temperature range		[℃]	-40 ~ +70℃
Operating frequency		[Hz]	50/60 Hz
Mounting on			Screw
Operation status indication			Normal operation: Green, Abnormal/After an accident: Red
Protection degree			IP20
Protection mode			L-N, N-PE (G), L-PE (G)
Ground			TN
Certification			CE

Product rating

- Single phase 2W+G (SPL)

SPD Type			SPL (AC 220V)	
			SPL2-40S	SPL2-80S
Class			Class II	
Rated system		[Pole]	2W+G	
Rated voltage, Un	AC	[V]	220	
Max. continuous operating voltage, Uc	AC	[V]	385	
Voltage protection level, Up		[kV]	2.5	3.0
Nominal discharge current, In (8/20㎲)		[kA, per mode]	20	40
Maximum discharge current, Imax (8/20㎲)		[kA, per mode]	40	80
Lightning impulse current, Iimp (10/350㎲)		[kA, per mode]	-	-
Response time, t_A		[ns]	< 5 ns	
Operating temperature range		[℃]	-40 ~ +70℃	
Operating frequency		[Hz]	50/60 Hz	
Mounting on			Screw	
Operation status indication			Normal operation: Green, Abnormal/After an accident: Red	
Protection degree			IP20	
Protection mode			L-N, N-PE (G)	
Ground			TN	
Certification			KS, CE	

Product rating

- Three phase 3W+G (SPT) AC 220V

SPD Type			SPT (AC 220V)			
			SPT2-40S	SPT2-80S	SPT1-120S	SPT1-160S
Class			Class II		Class I, Class II	
Rated system		[Pole]	3W+G			
Rated voltage, Un	AC	[V]	220			
Max. continuous operating voltage, Uc	AC	[V]	385			
Voltage protection level, Up		[kV]	2.5	3.0	2.0	2.0
Nominal discharge current, In (8/20㎲)		[kA, per mode]	20	40	-	-
Maximum discharge current, Imax (8/20㎲)		[kA, per mode]	40	80	120	160
Lightning impulse current, Iimp (10/350㎲)		[kA, per mode]	-	-	6.5	6.5
Response time, t_A		[ns]	< 5 ns			
Operating temperature range		[℃]	-40 ~ +70℃			
Operating frequency		[Hz]	50/60 Hz			
Mounting on			Screw			
Operation status indication			Normal operation: Green, Abnormal/After an accident: Red			
Protection degree			IP20			
Protection mode			L-PE (G)			
Ground			TN			
Certification			KS, CE			

* SPT can not be used in Delta wiring grounding system

Product rating

- Three phase 3W+G (SPT) AC 380V

SPD Type			SPT (AC 380V)			
			SPT2-40S	SPT2-80S	SPT1-120S	SPT1-160S
Class			Class II		Class I, Class II	
Rated system		[Pole]	3W+G			
Rated voltage, Un	AC	[V]	380			
Max. continuous operating voltage, Uc	AC	[V]	385			
Voltage protection level, Up		[kV]	2.5	3.0	2.0	2.0
Nominal discharge current, In (8/20㎲)		[kA, per mode]	20	40	-	-
Maximum discharge current, Imax (8/20㎲)		[kA, per mode]	40	80	120	160
Lightning impulse current, Iimp (10/350㎲)		[kA, per mode]	-	-	6.5	6.5
Response time, t_A		[ns]	< 5 ns			
Operating temperature range		[℃]	-40 ~ +70℃			
Operating frequency		[Hz]	50/60 Hz			
Mounting on			Screw			
Operation status indication			Normal operation: Green, Abnormal/After an accident: Red			
Protection degree			IP20			
Protection mode			L-PE (G)			
Ground			TN			
Certification			KS, CE			

* SPT can not be used in Delta wiring grounding system

SP series (Box type)

Product rating

- Three phase 3W+G (SPT) AC 440V

SPD Type			SPT (AC 440V)			
			SPT2-40S	SPT2-80S	SPT1-120S	SPT1-160S
Class			Class II		Class I, Class II	
Rated system		[Pole]	3W+G			
Rated voltage, Un	AC	[V]	440			
Max. continuous operating voltage, Uc	AC	[V]	385			
Voltage protection level, Up		[kV]	2.5	3.0	2.0	2.0
Nominal discharge current, In (8/20㎲)		[kA, per mode]	20	40	-	-
Maximum discharge current, Imax (8/20㎲)		[kA, per mode]	40	80	120	160
Lightning impulse current, Iimp (10/350㎲)		[kA, per mode]	-	-	6.5	6.5
Response time, t_A		[ns]	< 5 ns			
Operating temperature range		[℃]	-40 ~ +70℃			
Operating frequency		[Hz]	50/60 Hz			
Mounting on			Screw			
Operation status indication			Normal operation: Green, Abnormal/After an accident: Red			
Protection degree			IP20			
Protection mode			L-PE (G)			
Ground			TN			
Certification			KS, CE			

* SPT can not be used in Delta wiring grounding system

Product rating

- Three phase 4W +G (SPY) 127S

SPD Type			SPY (AC 127/220V)				
			SPY2-40S	SPY2-80S	SPY1-120S	SPY1-160S	SPY1-200S *
Class			Class II		Class I, Class II		
Rated system		[Pole]	4W+G				
Rated voltage, Un	AC	[V]	127/220				
Max. continuous operating voltage, Uc	AC	[V]	385				
Voltage protection level, Up		[kV]	2.5	3.0	2.0	2.0	2.0
Nominal discharge current, In (8/20㎲)		[kA, per mode]	20	40	-	-	-
Maximum discharge current, Imax (8/20㎲)		[kA, per mode]	40	80	120	160	200
Lightning impulse current, Iimp (10/350㎲)		[kA, per mode]	-	-	6.5	6.5	12.5
Response time, t_A		[ns]	< 5 ns				
Operating temperature range		[℃]	-40 ~ +70℃				
Operating frequency		[Hz]	50/60 Hz				
Mounting on			Screw				
Operation status indication			Normal operation: Green, Abnormal/After an accident: Red				
Protection degree			IP20				
Protection mode			L-N, N-PE (G)				
Ground			TN				
Certification			KS, CE				

* The wiring direction of SPY1-200S is located on the side. (Refer to external dimension)

Product rating

- Three phase 4W+G (SPY) 220S

SPD Type			SPY (AC 220/380V)				
			SPY2-40S	SPY2-80S	SPY1-120S	SPY1-160S	SPY1-200S *
Class			Class II		Class I, Class II		
Rated system		[Pole]	4W+G				
Rated voltage, Un	AC	[V]	220/380				
Max. continuous operating voltage, Uc	AC	[V]	385				
Voltage protection level, Up		[kV]	2.5	3.0	2.0	2.0	2.0
Nominal discharge current, In (8/20㎲)		[kA, per mode]	20	40	-	-	-
Maximum discharge current, Imax (8/20㎲)		[kA, per mode]	40	80	120	160	200
Lightning impulse current, Iimp (10/350㎲)		[kA, per mode]	-	-	6.5	6.5	12.5
Response time, t_A		[ns]	< 5 ns				
Operating temperature range		[℃]	-40 ~ +70℃				
Operating frequency		[Hz]	50/60 Hz				
Mounting on			Screw				
Operation status indication			Normal operation: Green, Abnormal/After an accident: Red				
Protection degree			IP20				
Protection mode			L-N, N-PE (G)				
Ground			TN				
Certification			KS, CE				

* The wiring direction of SPY1-200S is located on the side. (Refer to external dimension)

Product rating

- Iimp 12.5kA Class I SPD

SPD Type			SPL1-13/50S	SPT1-13S	SPY1-13/50S
Class			Class I		
Rated system		[Pole]	2W+G	3W+G	4W+G
Rated voltage, Un	AC	[V]	220	380	380/220
Max. continuous operating voltage, Uc	AC	[V]	320		
Voltage protection level, Up		[kV]	L-N: 1.2, N-PE: 1.8	L-N: 1.2, N-PE: 1.8	L-N: 1.2, N-PE: 1.8
Nominal discharge current, In (8/20㎲)		[kA, per mode]	-	-	-
Maximum discharge current, Imax (8/20㎲)		[kA, per mode]	-	-	-
Lightning impulse current, Iimp (10/350㎲)		[kA, per mode]	12.5/50	12.5	12.5/50
Response time, t_A		[ns]	< 5 ns		
Operating temperature range		[℃]	-40 ~ +70℃		
Operating frequency		[Hz]	50/60 Hz		
Mounting on			Screw		
Operation status indication			Normal operation: Green, Abnormal/After an accident: Red		
Protection degree			IP20		
Protection mode			L-N, N-PE (G)	L-PE (G)	L-N, N-PE (G)
Ground			TN/TT/IT		
Certification			KS, CE		

* SPT can not be used in Delta wiring grounding system

SP series (Box type)

Product rating

- Iimp 25kA Class I SPD

SPD Type			SPL1-25/50S	SPT1-25S	SPY1-25/100S
Class			Class I		
Rated system		[Pole]	2W+G	3W+G	4W+G
Rated voltage, Un	AC	[V]	220	380	380/220
Max. continuous operating voltage, Uc	AC	[V]	320		
Voltage protection level, Up		[kV]	L-N: 1.3, N-PE : 2.0	L-N: 1.3, N-PE : 2.0	L-N: 1.3, N-PE : 2.0
Nominal discharge current, In (8/20㎲)		[kA, per mode]	-	-	-
Maximum discharge current, Imax (8/20㎲)		[kA, per mode]	-	-	-
Lightning impulse current, Iimp (10/350㎲)		[kA, per mode]	25/50	25	25/100
Response time, t_A		[ns]	< 5 ns		
Operating temperature range		[℃]	-40 ~ +70℃		
Operating frequency		[Hz]	50/60 Hz		
Mounting on			Screw		
Operation status indication			Normal operation: Green, Abnormal/After an accident: Red		
Protection degree			IP20		
Protection mode			N-PE (G)	L-PE (G)	L-N, N-PE (G)
Ground			TN/TT/IT		
Certification			KS, CE		

* SPT can not be used in Delta wiring grounding system

External dimension

SPL3-20S

[Unit: mm]

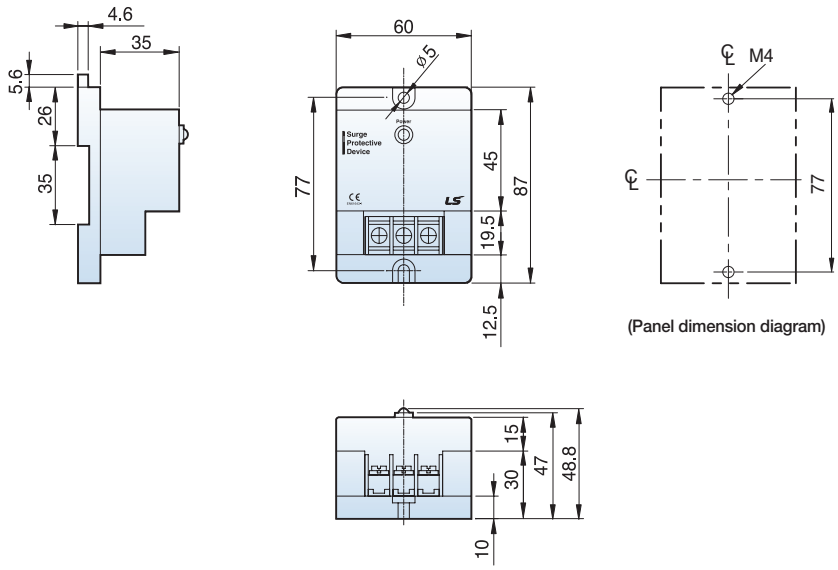

(Panel dimension diagram)

SPL2-40S

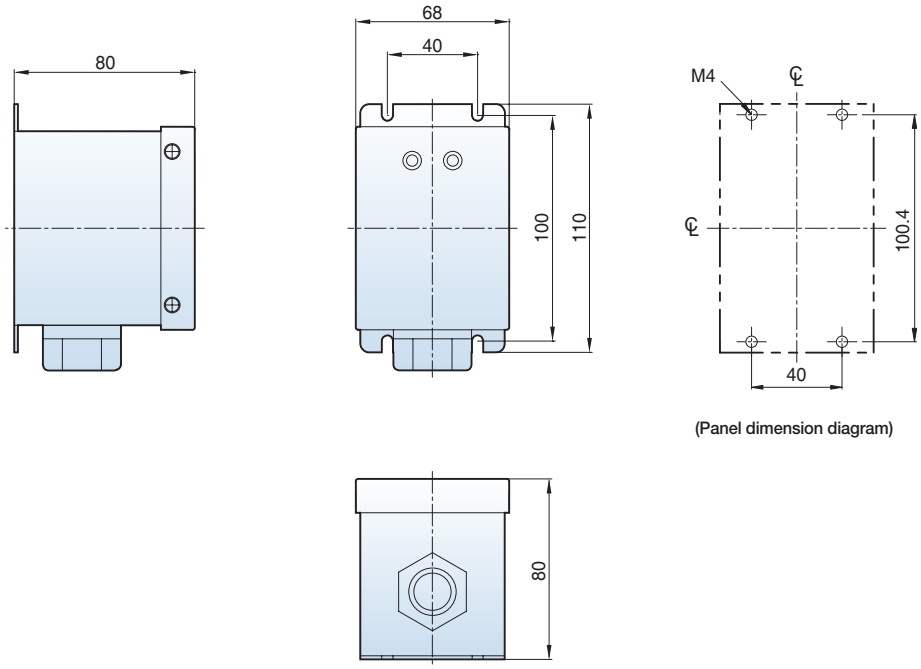

(Panel dimension diagram)

External dimension

SPL2-80S

[Unit: mm]

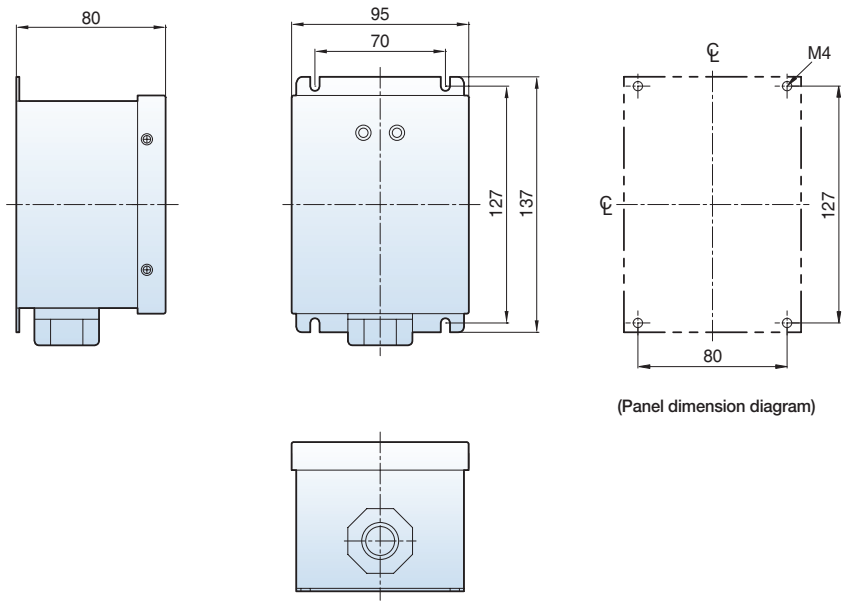

(Panel dimension diagram)

SPT2-40S 220V, 380V, 440V

SPY2-40S 127/220V, 220V

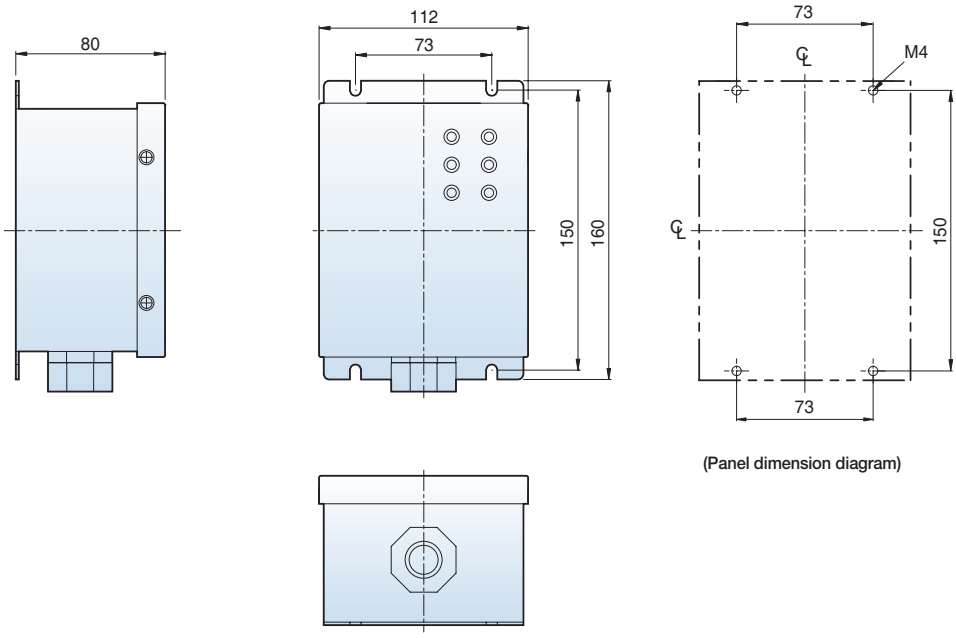

(Panel dimension diagram)

SPT2-80S 220V, 380V, 440V

SPY2-80S 127/220V, 220V

[Unit: mm]

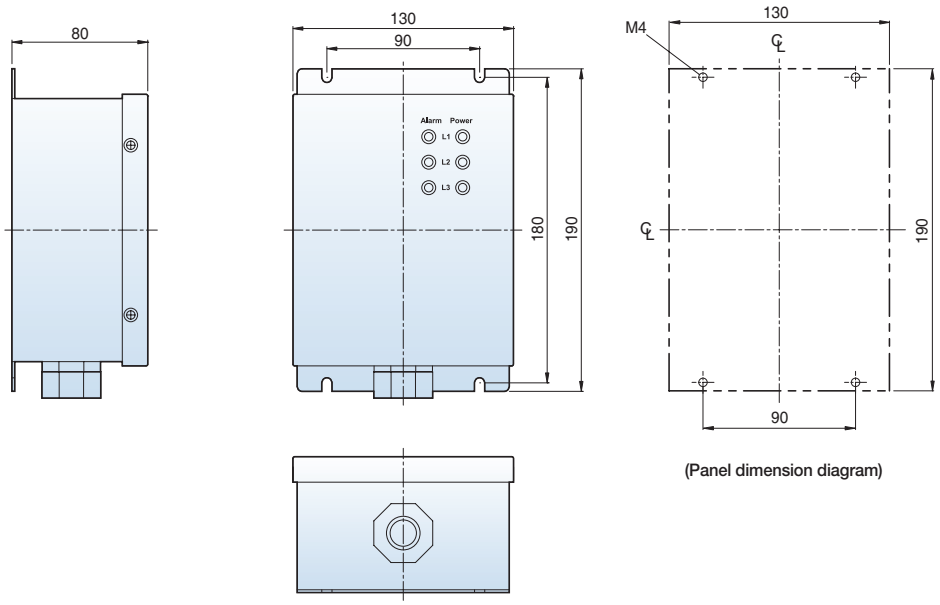

(Panel dimension diagram)

SPT1-120S 220V, 380V, 440V, SPY1-120S 127/220V, 220V

SPT1-160S 220V, 380V, 440V, SPY1-160S 127/220V, 220V

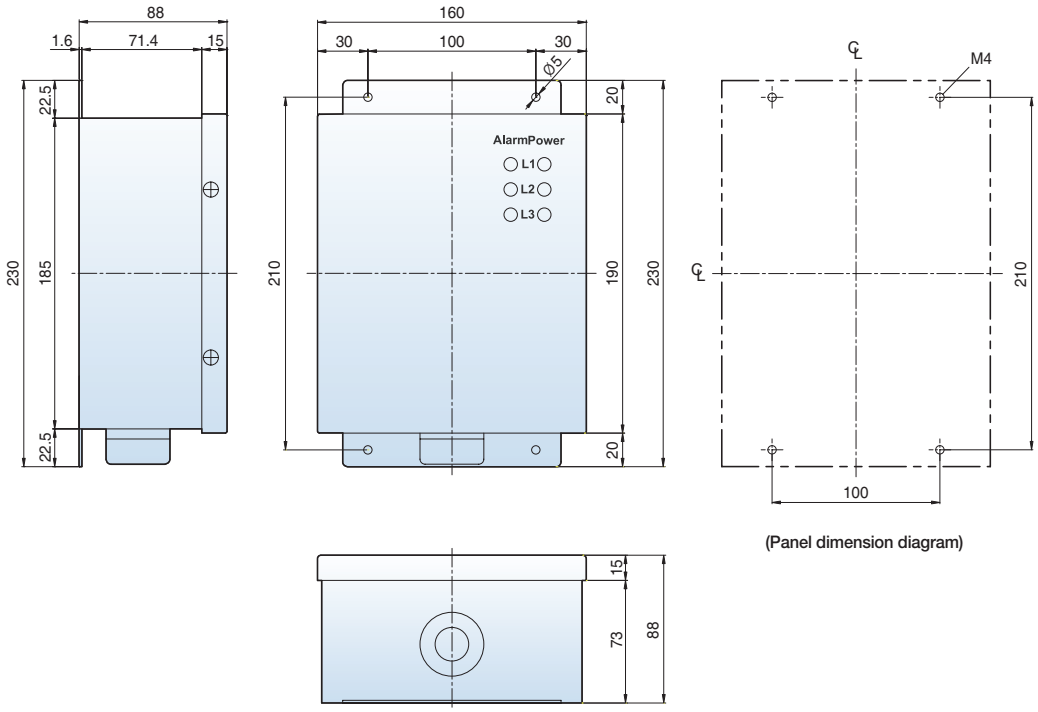

(Panel dimension diagram)

External dimension

SPY1-200S 127/220V, 220V

[Unit: mm]

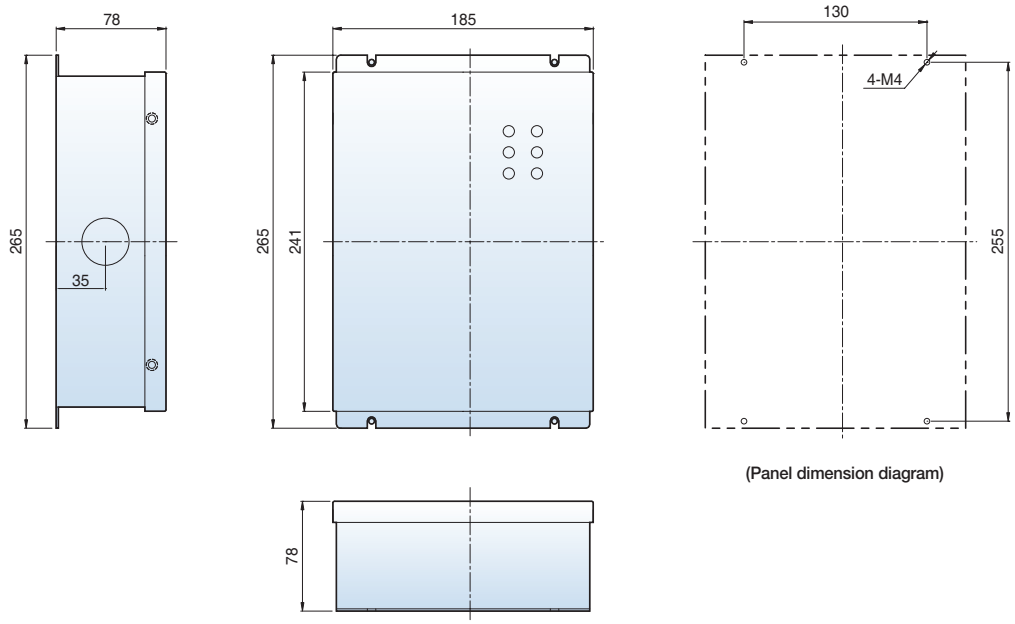

(Panel dimension diagram)

SPL1-13/50S 220V, SPL1-25/100S

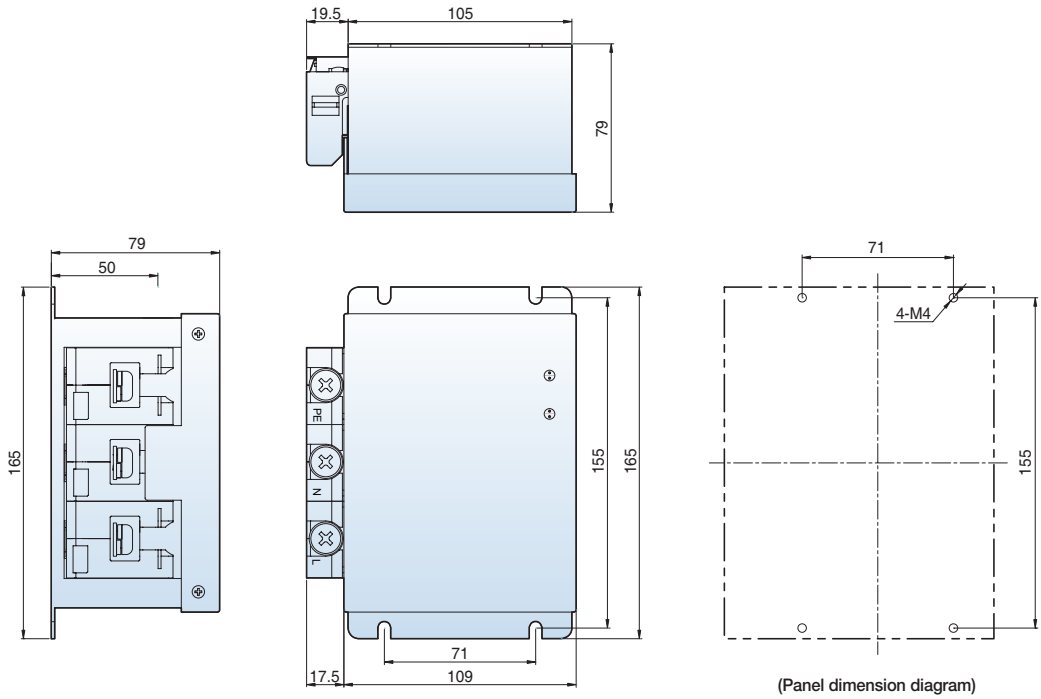

(Panel dimension diagram)

SPT1-13/50S, SPT1-25/100S

[Unit: mm]

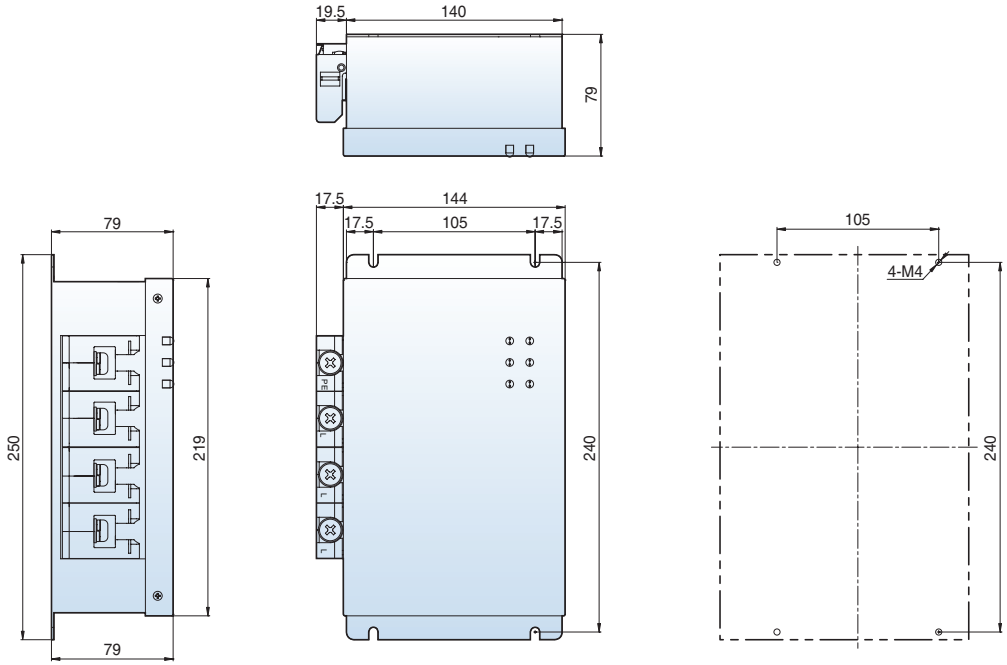

(Panel dimension diagram)

SPY1-13/50S, SPY1-25/100S

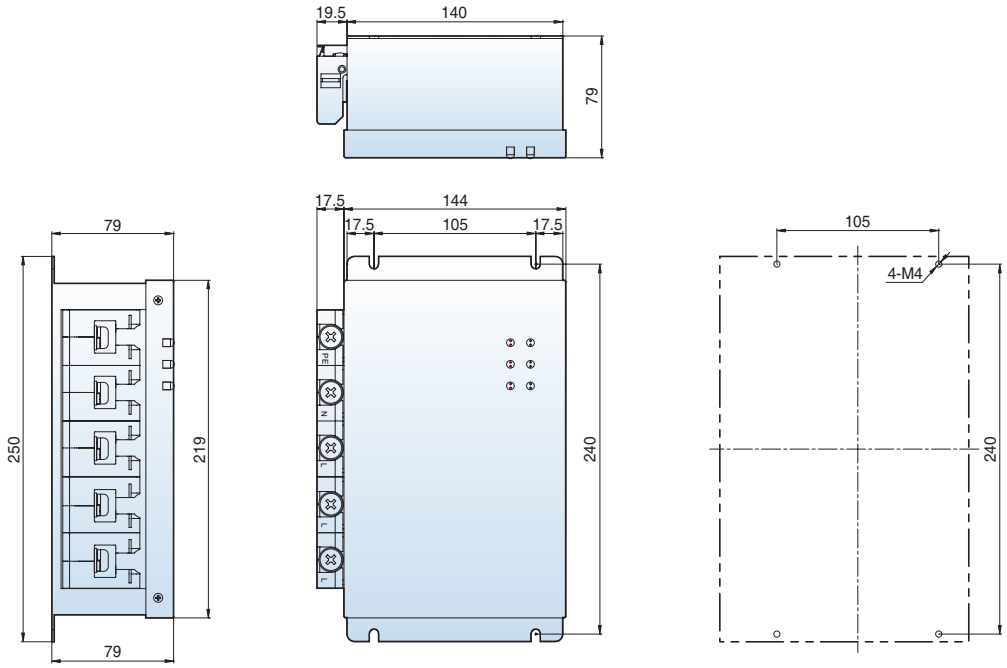

(Panel dimension diagram)

SP series Ordering

SP — T 2 — 40 S 220V

Basic type
SP

Phase array	
L	2W+G
T	3W+G
Y	4W+G

Class level	
3	Class Ⅲ
2	Class Ⅱ
1	Class Ⅰ

Imax/Iimp	
40	In 20kA, Imax 40kA
80	In 40kA, Imax 80kA
120	Iimp 6.5kA, Imax 120kA
160	Iimp 6.5kA, Imax 160kA
200	Iimp 12.5kA, Imax 200kA
13	Iimp 12.5kA
13/50	Iimp 12.5kA (L-N), 50kA (N-PE)
25	Iimp 25kA
25/100	Iimp 25kA (L-N), 100kA (N-PE)

Type	
S	Basic type

Ue	
220V	2W+G or 3W+G
380V	3W+G
440V	3W+G
220/127V	4W+G
380/220V	4W+G

DC SPD

Surge Protective Device

The surge protector is used on an DC power system and protects the electric system from a surge over-voltage.

Contents

BK series (DC / DIN type)

Product description/Product rating 24

External dimension/Installation wiring method/Ordering 25

Technical information 30

BK series (DC / DIN type)

Product description

The BK Series DC/DIN type surge protect protects a DC electric system from surge voltages. Also, the system allows replacement of the protective element (MOV), ensuring convenience and economy. However, as only the protective module is provided, other components should be added when the system is installed in accordance with the site condition.
When the protective device is in a normal condition, the indication display will be green. The display will turn black when the protective device is activated (for an anomaly or an accident.)

Product rating

Item		DC Type			
		BK20S-DC110	BK20S-DC600	BK20S-DC1000	BK20S-DC1500
No. of poles	[Pole]	2P	3P		
Rated voltages	Un [V]	DC110	DC600	DC1000	DC1500
Max. continued-operation voltage	Uc [V]	DC220	DC700	DC1200	DC1500
Voltage protection level	Up [kV]	≤1.0	≤2.5	≤3.9	≤4.5
Nominal discharge current	In [kA]	20	20	20	20
Max. discharge current	Imax [kA]	40	40	40	40
Impulse current	Iimp [kA]	-	-	-	-
Grades	Test Class	Class II			
Reaction time		< 25ns			
Status indication		Have Status indication			
Operating temperature range		-40℃~80℃			
Cross-sectional area of the connecting wires		6mm² or more			
Accessories		AL Note1)			
Standard		IEC 61643-11 / UL1449			
Certification		CE	CE, UL	CE, UL	CE
SPD Disconnector	MCCB	TD100 2P 32A	TD100 3P 32A	TD100 4P 32A	TSD250N/H 4P 63A (Under development)
	MCB	BK63H-DC 2P 40A	BK63H-DC 3P 40A	BK63H-DC 4P 40A	-

Note) 1. The AL contact accessories are not sole separately.
You need to choose these accessories when you place your order for the product.
Please be mindful of this fact when you place your order.

External dimension

BK20S-DC

[Unit : mm]

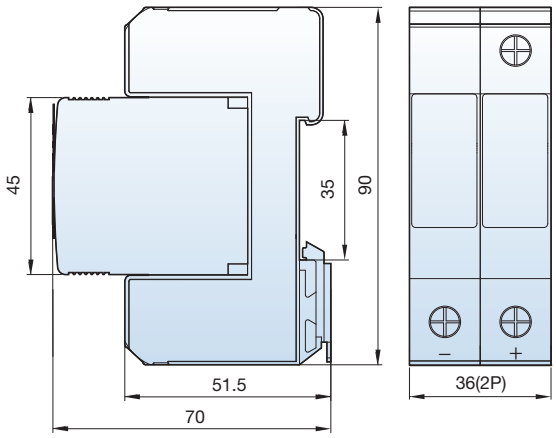

2P

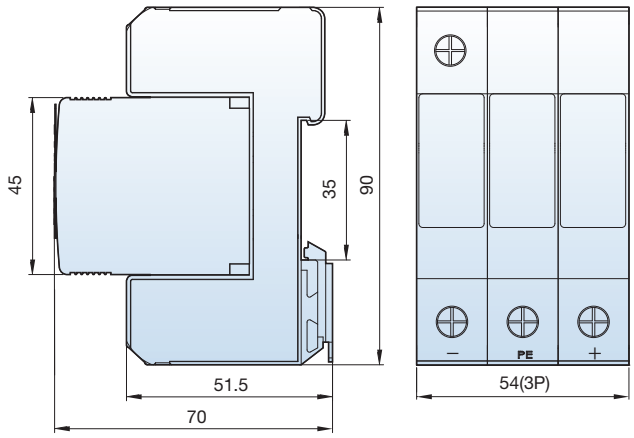

3P

Installation wiring method

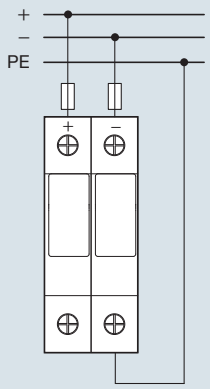

2P

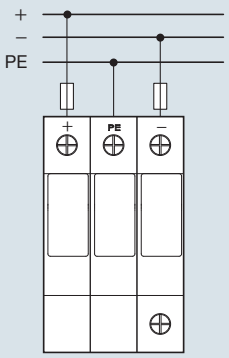

3P

Wiring diagram

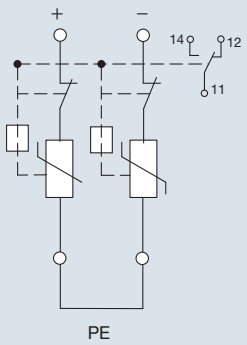

2P

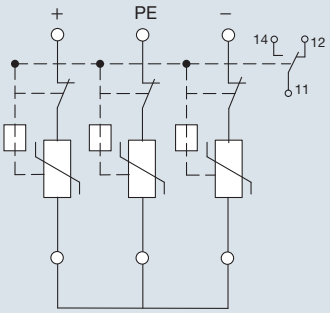

3P

Ordering

BK	20	S	–	DC	2P	220V	40kA	AL
Basic type	In (kA)	Type		Class level	Poles	Uc	Imax	Option
BK	20	S Din-rail		DC110	2P	220V	40kA	- None
				DC600	3P	700V		AL Alarm
				DC1000		1200V		
				DC1500		1800V		

Memo

SPD

Surge Protective Device

The SPD Disconnector is responsible for disconnecting the SPD from the system in the event of failure or maintenance of the SPD.

Contents

SPD Disconnector

Product description/Product rating 28

External dimension/Ordering 29

Technical information 30

SPD Disconnector

Product description

SPD Disconnector is a device that separates the SPD from the system during SPD failure and maintenance work. It has a trip function that can detect and cut off leakage current caused by SPD deterioration (varistor burnout, etc.) and has a high surge resistance to prevent the unintended trip operation of the Disconnector.

Product rating

Item		SD10-T2	SD20-T2	SD30-T2	SD40-T2	SD13-T1
Grades	Test Class	Class II, III	Class II			Class I
No. of poles		1,2,3,4 Pole				
Nominal discharge current	In [kA]	10kA	20kA	30kA	40kA	-
Max. discharge current	Imax [kA]	20kA	40kA	60kA	80kA	-
Impulse current	Iimp [kA]	-	-	-	-	12.5kA
Short circuit current	Isc [kA]	25kA				
Rated voltages	Ue [V]	230 / 400V				
Rated insulation voltage	Ui [V]	500V				
Voltage protection level	Up [kV]	0.25kV	0.4kV	0.5kV	0.7kV	0.3kV
Frequency		50 / 60Hz				
Min. delay current	It	3A (<10s)				
Min. instantaneous current	Ii	5A(>0.1s), 10A(<0.1s)				
Protection degree		IP20				
Max. connection wire range		25mm²				
AL connection wire range		1.5mm²				
Operating temperature range		-25℃~60℃				
Ambient humidity		20%~90%				
Din–Rail		EN60715 (35mm)				

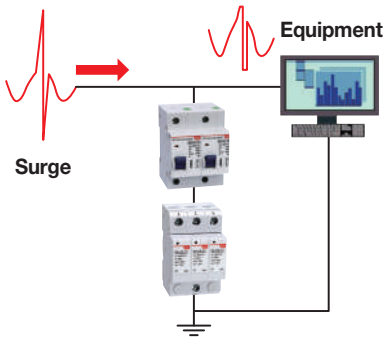

- Convenient SPD replacement
- High surge resistance
- Leakage current detection
- Prevent malfunctions in case of short circuit
- Easy installation using DIN rail

* AL available for SD20-T2 and SD-40T2

External dimension

SD10, 20, 30, 40-T2

[Unit : mm]

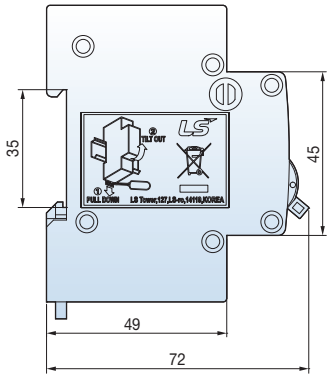

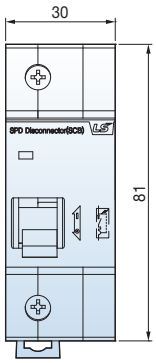

1P

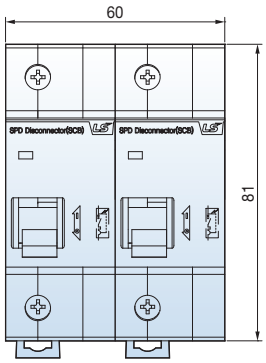

2P

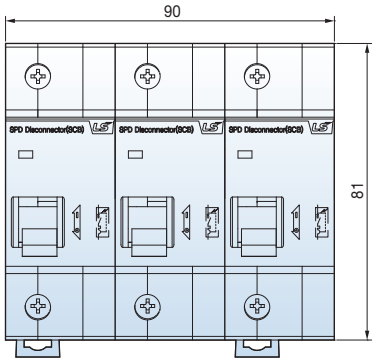

3P

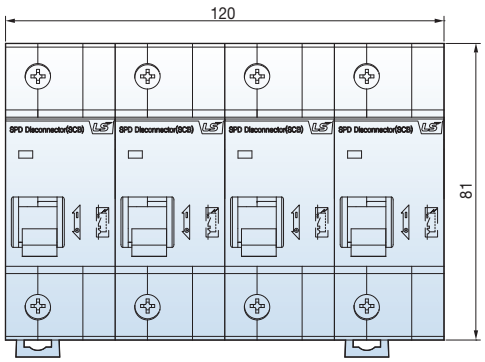

4P

Ordering

SD	20	—	T2	2P	40kA	AL
Basic type	In/Iimp (kA)		Class level	Poles	Imax	Option
SPD Disconnector	10		T1 Class I	1P	20kA	- None
	20		T2 Class II	2P	40kA	AL* Alarm
	30			3P	60kA	
	40			4P	80kA	
	13 *				-	

* AL: Alarm contact is available only for SD20-T2 and SD40-T2.
* 13: Class I Iimp 12.5kA

Concept of surge

According to the definition of IEC, surge is delivered along the line or circuit and is the transient wave form of the electric current, voltage, or power with rapidly increasing and gradually decreasing characteristics. (IEC IEV 161-02-01)
If it is rainy with flashing lightning, the accident of the dead Internet or phone often occurs. Moreover, when the light or electric machine switch is turned on, the audio sound is distorted or the TV screen is fuzzy. It is caused by surge.

Main types of power problems

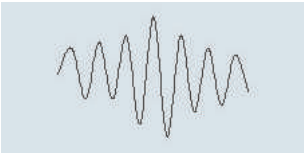

Surges, swells, and short-term overvoltage

- Occurring during lightning and when turning on or off the system power line, turning on or off the load, and operating the device
- The voltage with the Rated system voltage exceeding 150% is called surge.
- Breakage or degradation of an electronic part (equipment)

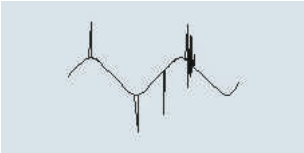

Transients

- Transient is similar to surge but momentarily occurs only in the 1~2 sine wave form.
- Impossible to process large data with equipment damaged
- The positive impulse transient is also called spike.

Causes of surge occurrence

1. Surge caused by natural phenomena

Direct strike

Lightning directly strikes the structure, equipment, and power line, and the voltage with about 20kv or higher and the overcurrent with several kA~300kA or higher occurs.

Indirect lightning

It strikes the power transmission and communication line, and surge is transmitted through the line. It occurs the most frequently and has the very large energy with 6,000V or higher so that the damage caused by it is the most frequent and the most.

Inducement lightning

Surge occurs due to the surge caused by the ground potential rapidly increased by the inflow of the high voltage and high current induced through the conductor such as the power line, communication line, and metal pipe buried in the land near the lightning point.

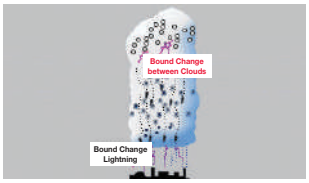

Bound change

The charge induced with the bound change between the ground surface and a cloud, inside a cloud, and between clouds flows into the power line, metal body, or ground surface so that equipment is damaged.

Causes of surge occurrence

2. Switching and starting surge

The switching surge with the maximum 6,000V when the substation switches the high voltage power supply line and with the maximum 3,000V when the main switch of the distribution cabinet is operated can flow in.
Furthermore, the maximum voltage impulse with 3,000V occurs when operating heavy equipment.
The impulse with 400~1,000V and the noise when using the arc welding device, compressor, vacuum cleaner, or office machine nearby occur additionally.

Damage caused by surge

Nowadays, The damage caused by surge is rapidly increased by building intelligent buildings, expanding the introduction of various control systems, and introducing the ubiquitous environment.
There has been no correct research on the damage caused by surge in the nation so far. However, in the United States, it is estimated that the damage of time and expenses due to the occurrence of failure of the electronic system caused by the high voltage and overcurrent reaches 26 billion USD only in the industry every year.
As shown in the following table, 88.3% of unknown failures in case of electronic equipment are caused by surge.

Power disturbance	Monthly average occurrence times	Percentage (%)
Oscillatory transients	62.2	48.8
Voltage spike	50.7	39.5
Under voltage	14.4	11.2
Over voltage	00.0	0.00
Blackout	0.06	0.05
Total	127.9	100

∗Transaction on “Power Apparatus and system” July-August. 1974 issue 1974 IEEE (Institute of Electrical and Electronic Engineers)

Surge test wave form (IEC Specification)

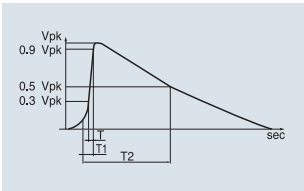

Surge voltage wave form

1.2/50㎲ Surge voltage wave form

In case of the voltage wave form, it takes 1.2㎲ (IEC 60-1) for the induced impulse to go up from the start to the 10~90% of the maximum value induced at that time and 50㎲ for it to reach the 50% (IEC 469-1).
The elevation time of the voltage wave form is short in comparison with that of the current wave form, but the sustenance time continues more than two times in comparison with the current.

* IEC 60-1 : High Voltage Test Techniques part1 : general definition and test requirements
* IEC 469-1 : Pulse Techniques and Apparatus part 1 : pulse terms and definitions

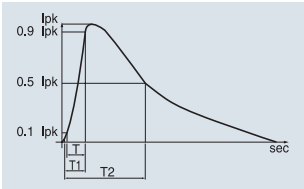

Surge current wave form

8/20㎲ Surge current wave form

In case of the current wave form, it takes 8㎲ to reach the 90% of the maximum current value (1pk) in the 10% of the elevation curve and 20㎲ to go down to the 50% of the descending curve.

Overview of lightning

The phenomenon of lightning that is the major source of surge occurrence is the source of occurrence damaging the state-of-the-art equipment and human life.
If the direct strike comes into the information system equipment, the equipment and human life cannot be protected. Therefore, as for the measure for the damage caused by the direct strike, the proper protection region should be protected first with the selected lightning rod, and SPD should be used to prevent the facility damage in the system.

Principle of lightning creation

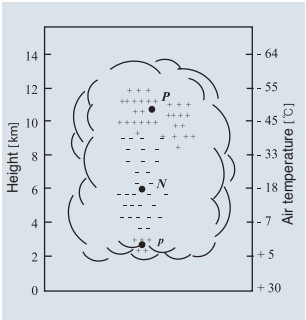

The thundercloud is the long vertical cloud and is 12,000m or higher in the summer. The representative explanation of the mechanism of charge separation and accumulation achieved within the thundercloud is as follows. There is a strong elevation air current within the thundercloud, and the large pellets of hail collide with tiny ice particles within it. The large pellets of hail are charged with the positive electricity and are transported upward with the elevation air current effect.
Accordingly, the positive charge is accumulated in the upper side within the thundercloud, and the negative charge is accumulated in the lower side.
Furthermore, the positive charge called 'the pocket charge' occurring from another mechanism is partially accumulated in the lower side.

Lightning progress mechanism

As for the lightning advanced by the downward leader with negative polarity, the preparatory insulation destruction occurs from the pocket positive charge existing in the lowest part of the negative charge cloud and the thundercloud, and the step leader is created in the lower end of the thundercloud accordingly and moves toward the land with the repetitive advancement and suspension. If the upward streamer charge occurs from the land when the step leader approaches the land closely and meets the downward leader, the return stroke goes toward the thundercloud for a lot of charge from the land to neutralize the charge of the conductive passage of the step leader.

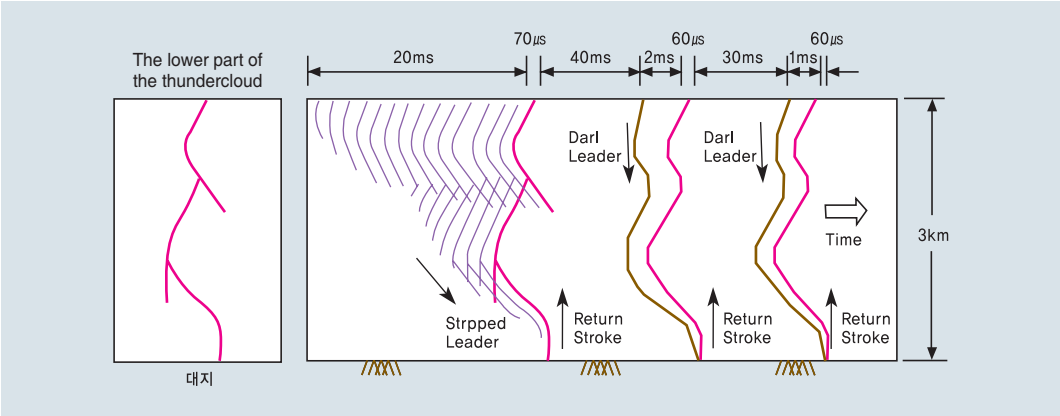

Surge inflow path

The paths through which the lightning surge flows finally into the electrical and electronic equipment according to the lightning charge phenomenon are classified into three types.

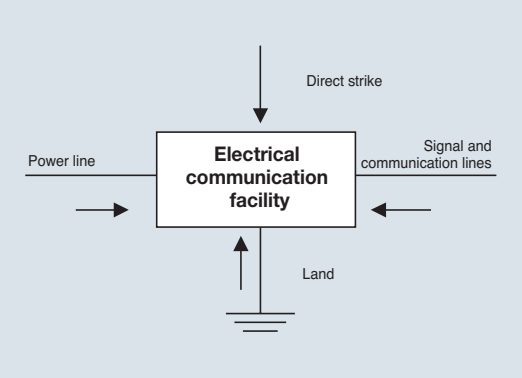

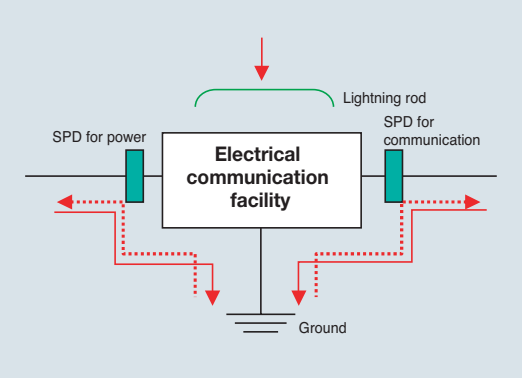

Direct strike

It is the phenomenon that lightning directly falls on the lightning rod, building structure, power line, antenna, and pipe.
The whole lightning charge energy flows in so that the great destruction is accompanied. Generally, the electrical device or electronic equipment is damaged near the progress path of the thunderstroke current, and there is a high risk of fire.
There is a rare possibility that the direct strike directly falls on the inside facility of the building with the external lightning protection facility such as lightning rod, but the part of a lightning rod (about 15% IEC 61643-12) can be classified as the power line or ground line. Likewise, the class I SPD should be installed in the power facility point (the distribution panel and main power panel bonded with the main ground terminal) through which the part of the direct stroke might flow.

Indirect lightning

It is the case of occurrence of the direct strike in the region a bit distant from a building, the part of the lightning charge energy indirectly flows into the facility through the external drop wire and through the ground system. Therefore, the class II or III SPD should be installed in preparation for the indirect lightning surge flowing from the outside even in the closed environment that doesn't need the external lightning protection system such as a lightning rod.

Induced lightning

It is the phenomenon occurring due to the strong electromagnetic wave induced when lightning strikes the lightning rod of a building or falls on the tree or surface of a ground building or when the charge between thunderclouds occurs in the near distance. It may occur in the trunk power line or in the intermediate point of communication and signal lines. In the branch point of the line 20m far from with the vertical wiring distance from the point inside he building with the class I SPD installed, the class II (Ex. distribution panel) or III (Ex. single load control panel and household distribution panel) SPD should be installed to prevent the inducement lightning.

Damages due to surge

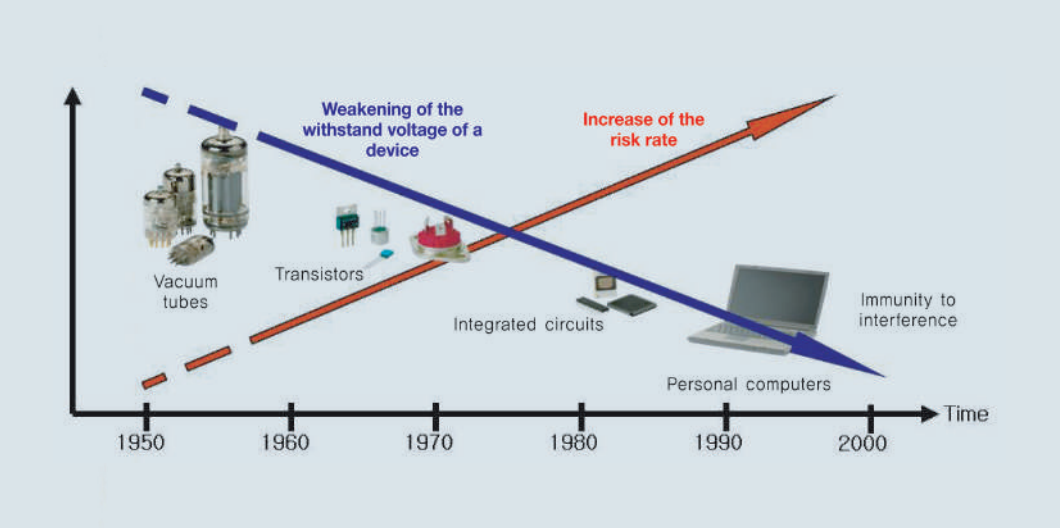

Weakening of the withstand voltage

Applying the Small, Light, and Multi-Function IC: The devices damaged by surge due to the increase of various 100V or lower information and communication devices, the number of the devices damaged by surge is gradually increasing.

Increase of the damage due to the network of a facility system

Occurrence of the surge inside the building due to the increase of network facilities in most of buildings damage all the equipment connected to the network.

Increase of the devices with surge or noise occurrence

- Rapid increase of the switching power change devices
- Increase of inducement load
- Charge and discharge of the DC load

Increase of lightning occurrence

As the number of thunderstorm days is increasing (11days=the average IKL for 20 years and 31 days for recent 4 years) due to the recent abnormal changes of weather and the subtropical climate is widespread in the nation, lightning will increase more, and the size of thunderstroke current will increase

Increase of damages

Damages due to the fire, breakage, malfunction, resetting of an unmanned facility, and increase of the product manufacturing defect rate (semiconductor parts) are increasing.

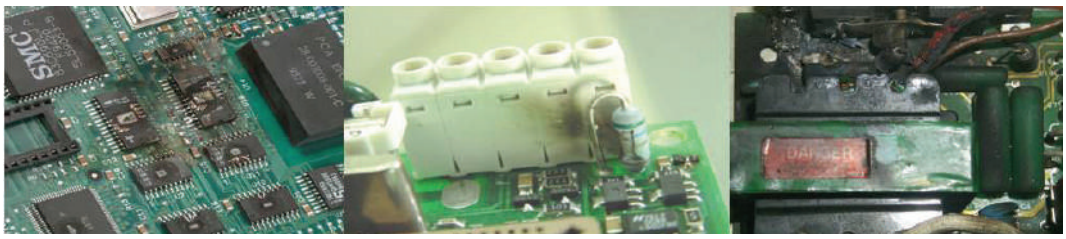

Burn-out of the electric devices due to surge

What is SPD (Surge Protective Device)?

SPD is the device protecting various types of equipment from surge.
SPD is the device attenuating the overvoltage and noise and is called SPD or TVSS (Transient Voltage Surge Suppressor). Specialists in the industry call it SPD. The terms such as SPD and TVSS are used interchangeably.
SPD is the equipment designed to attenuate the dangerous overvoltage at the very short moment appearing in the power line or telephone line, data network, CCTV circuit, cable TV circuit, and the power line and control line connected to the electronic equipment.

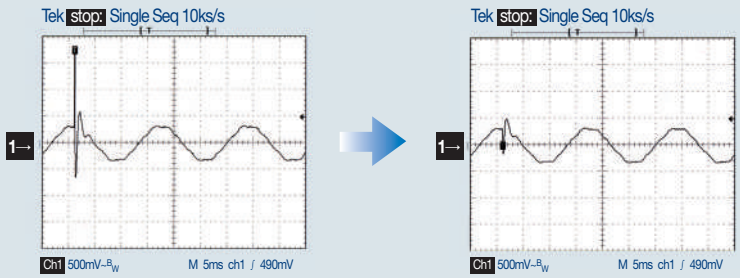

Wave form of Surge formation

Wave form of Surge isolation

Ex.) Blocking the general surge of SPD

Operating principle of SPD

The purpose of installing SPD (Surge Protective Device) is that when the surge current comes into the system due to any reasons, it is devised to have the current flow through itself instead of flowing through the load so that the abrupt elevation of the voltage drop occurring from the load is blocked to protect the load.
When the surge comes into the system, it can be achieved by letting the surge current flow through the passage (SPD) with low impedance.
MOV is the part with very large impedance in the normal state.
With the voltage surge, the impedance of MOV is greatly reduced, and it becomes the passage with low impedance having the surge flow through another passage that is not the load.
The flow of a huge voltage through SPD doesn't make voltage go up sharply.

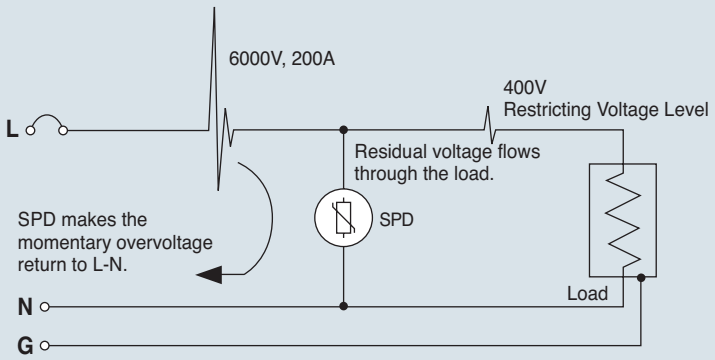

The conceptual diagram of the surge restriction of SPD

Operating principle of SPD

MOV is the most reliable technology out of the technologies attenuating the surge voltage.
The clamping characteristics of MOV are reliable so that 96% or more SPD for power is selecting MOV.
SAD (Silicon Avalanche Diode) is often used as the SPD for the data line or communication line.
Major features of MOV are as follows.

- It is devised to have the current rarely flow in the normal voltage.
- It is devised to have the current flow a lot in the high voltage.
  ➜ The voltage drop doesn't go up even though a lot of current flows.

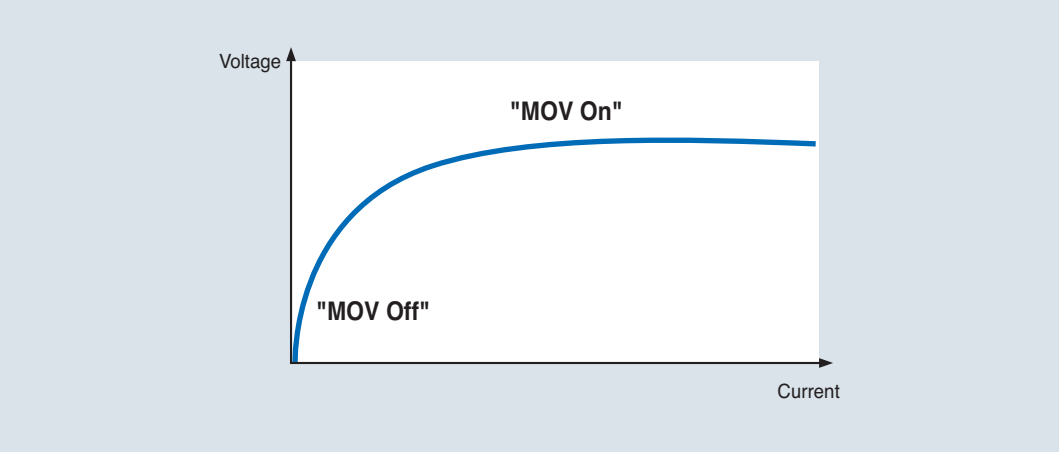

Voltage and current characteristics curve of SPD

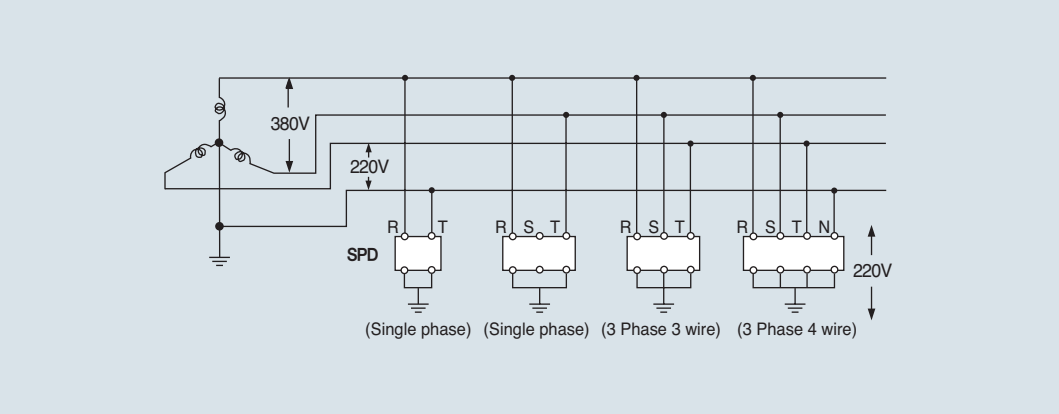

* The applied voltage is 380V between phases, but as SPD sets the ground, it becomes 220V based on the ground potential. SPD should be selected and installed in consideration of Maximum continuous operating voltage (MCOV) and the voltage protection level (Up).

Protection of power facilities

1st Protection

The surge penetrating from the outside is restricted by installing the surge protector on the ACB 2nd side of the low voltage distribution panel.

2nd Protection

The surge protector is installed in the distribution board of each building or in the input terminal of UPS or AVR to restrict the residual surge and the surge occurring internally.

3rd Protection

The surge protector is installed in the power input terminal of precision control equipment to minimize the damage to the load.

Applying APD on the basis of facility configuration

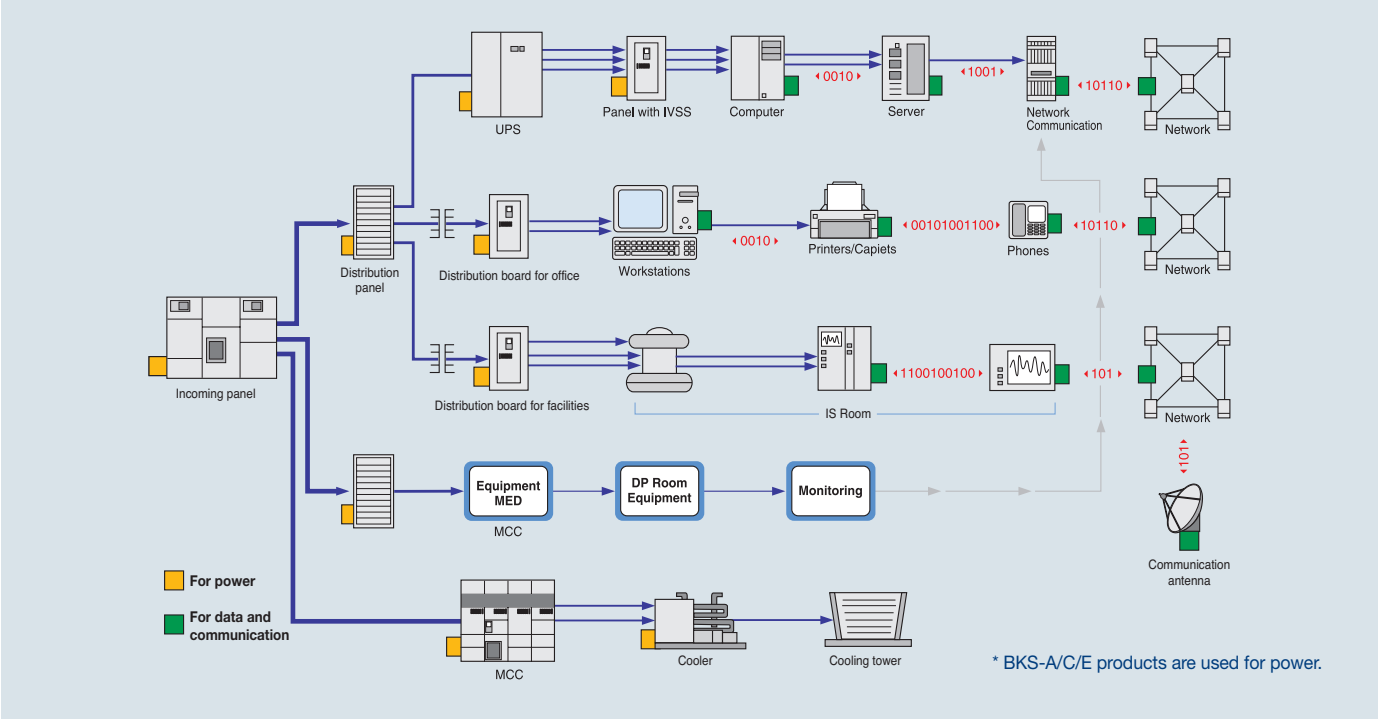

Types of Surge Protective Devices

Surge protective devices are classified into the voltage switching type and the voltage restricting type depending on the features.

Voltage switching type SPD

1) Features of the discharge type SPD
   If the surge exceeding the discharge start voltage of SPD comes in, the discharge momentarily occurs for 1 cycle to 2 cycles, and it is in the short circuit during discharge so that the rapid current flows through SPD with the momentary voltage drop accompanied.
2) Configuration of elements
   Discharge elements such as gas tube elements and air gap elements are used for the discharge type SPD.
3) Operating principle
   It is in the open state below the discharge start voltage and is in the conduction state of the momentary short circuit for the voltage exceeding the discharge start voltage. The conduction state continues for about 2 cycles at maximum, and it automatically returns to the open state if the surge is removed.

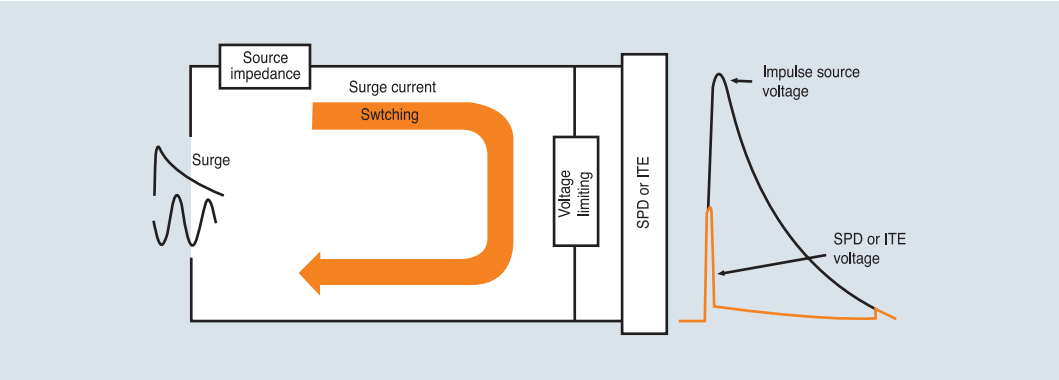

Voltage clamping type SPD

1) Features of the voltage clamping type SPD
   The voltage restricting type SPD is the type limiting the voltage only to the specific level differently from the discharge type. The limiting voltage is called clamping voltage or suppression voltage, and the restricting voltage is determined by the correlation between the line impedance and the lightning rod impedance.
2) Configuration of elements
   MOV (Metal Oxide Varistor), semiconductor diodes, and sidactors with the nonlinear voltage and current characteristics are used as elements.
3) Operating principle
   It has the very low impedance for the voltage exceeding the operating voltage and the very high impedance below the operating voltage so that the voltage is restricted for operation by the correlation between the line impedance and the Surge Protective Device (SPD) impedance.

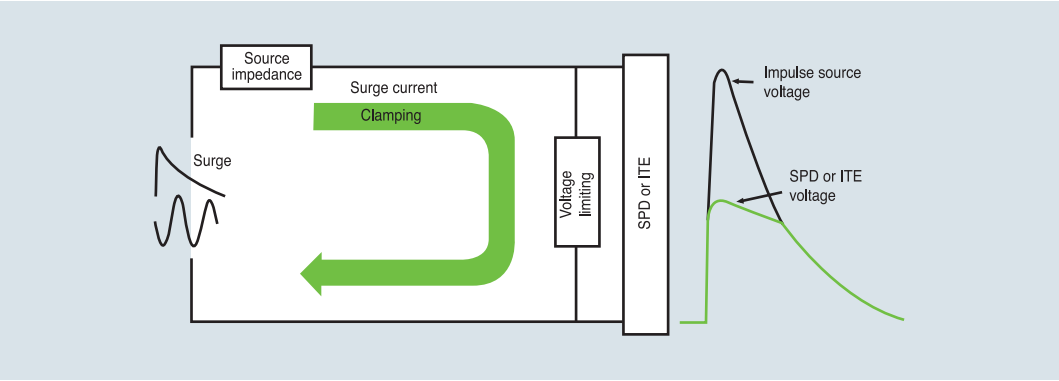

Din-rail type SPD

Din-rail type SPD is the protection element replacement type product manufactured as the plug-in type with the protection element inserted into the inflammable resin case.

- It consists of individual protection module combination.
- It is the plug-in type with the replacement for each protection element possible.
- The convenient maintenance environment is provided by providing the mechanical contact.
- It is the convenient protection element replacement type. Only the basic options (protection modules) are provided so that separate components have to be combined suitably to the site conditions during installation.
- When the service life of MOV expires, the red lever will come out as shown below.

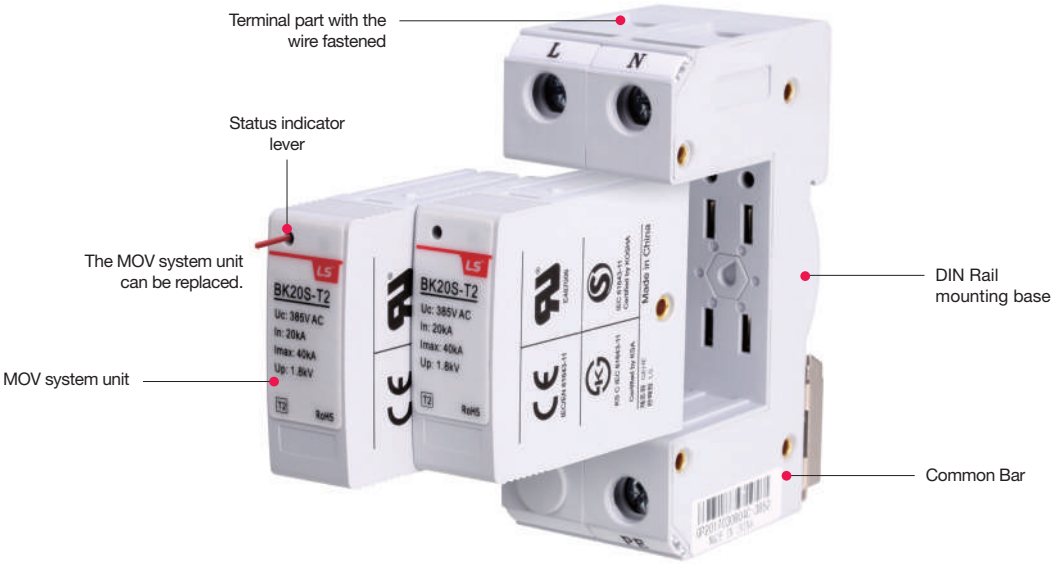

Accessory

AL accessory

When there is an accident, the alarm accessories can be used to check the accident signals.

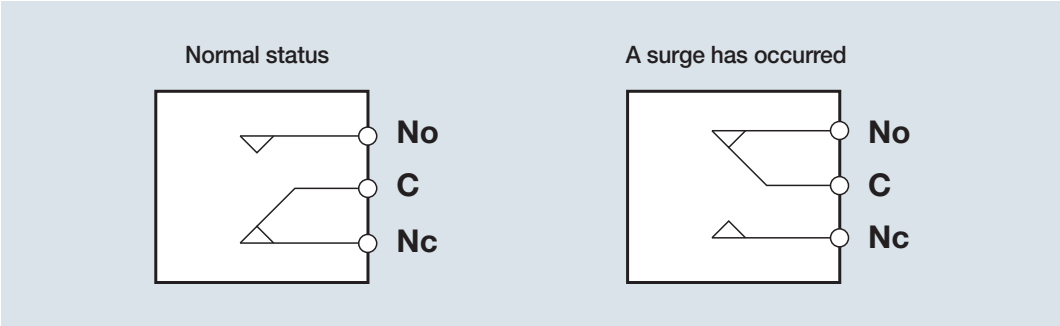

* During the normal status (NC contact), the device operates normally. However, when the internal separator is activated due to the degradation of the product by a surge, the AL contact will be switched to a No contact.

SPD Installation precautions and replacement instructions

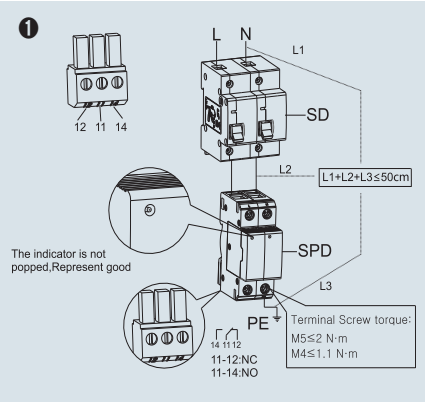

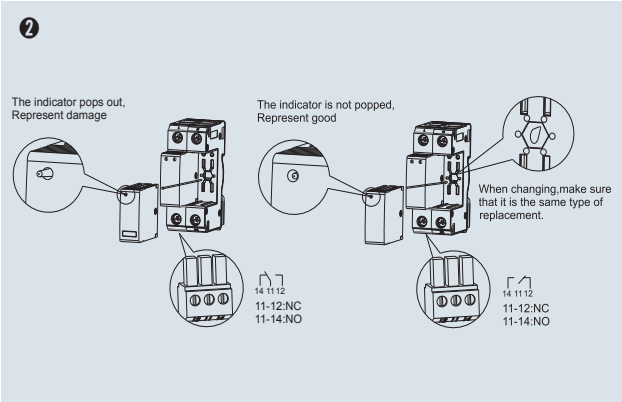

* SD Selection: Reference product catalog for selection

Characteristics for each application element of SPD

Metal Oxide Varistor (MOV)

- MOV has the property with the resistance value remarkably changing depending on the voltage.
- The insulation state (high impedance) is maintained up to the insulation destruction voltage set in the normal state, but if the surge voltage exceeding the maximum permitted voltage comes in, impedance is degraded so that the path through which the surge current flows is provided.

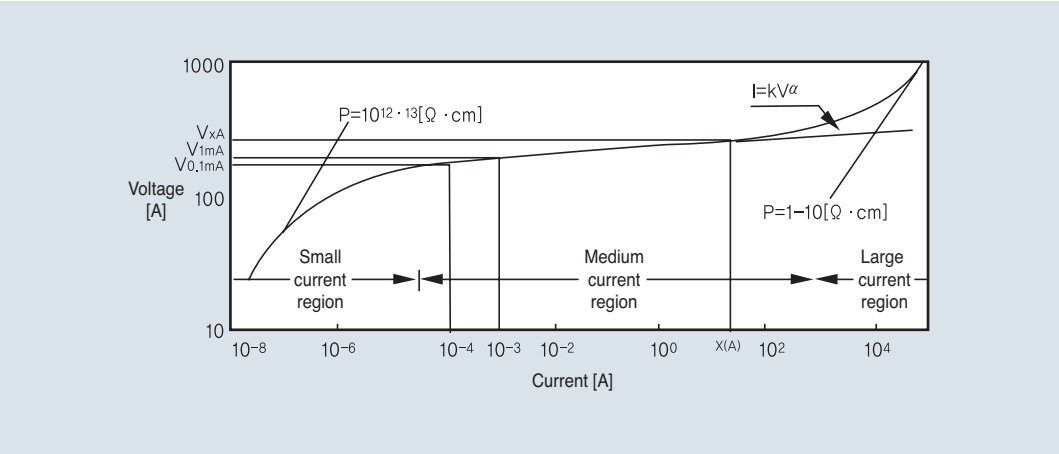

V-1 Characteristics of the Metal Oxide Varistor (MOV)

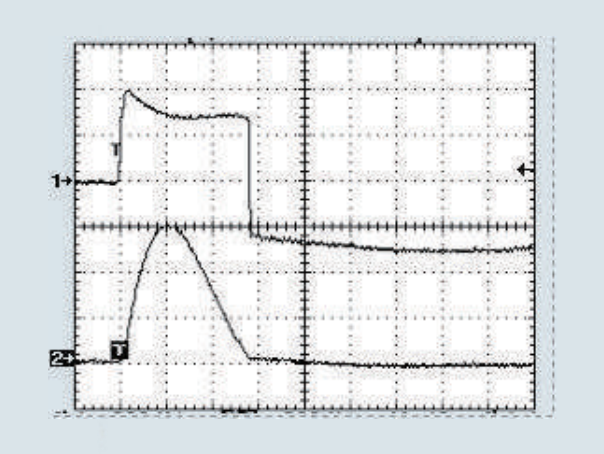

Operating characteristics of MOV

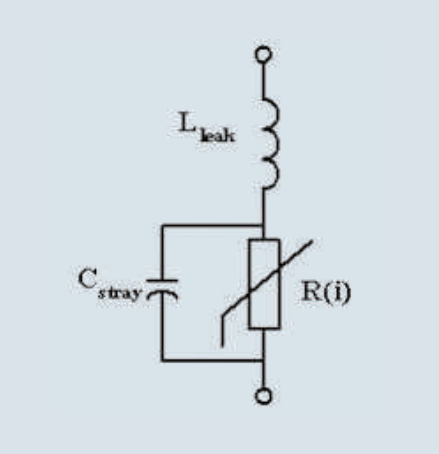

MOV equivalent circuit

Characteristics for each application element of SPD

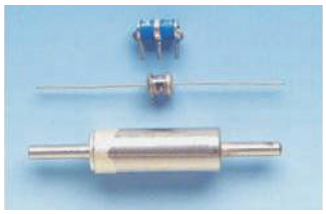

Gas gap

- It is various up to 1,000V. The discharge withstand current rating is high so that it may be needed to have the surge current with up to 300,000A flow.
- It has the characteristics of slow response speed and dynamic current so that it is used for a special case now.
- It has the advantages that it is operated with the discharge voltage permitted and that there is little leaked current during the normal time so that it is used in combination with another element if the high speed information processing is needed in the communication system.

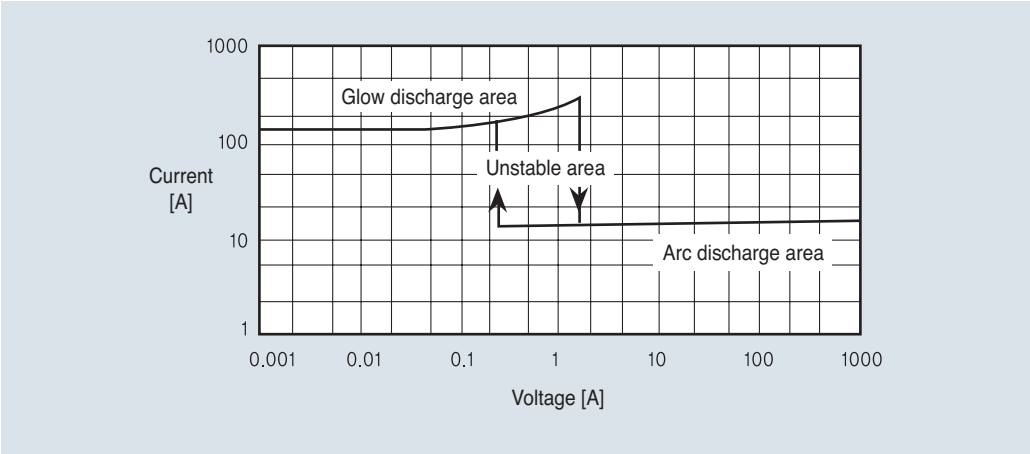

V-1 Characteristics of the discharge tube

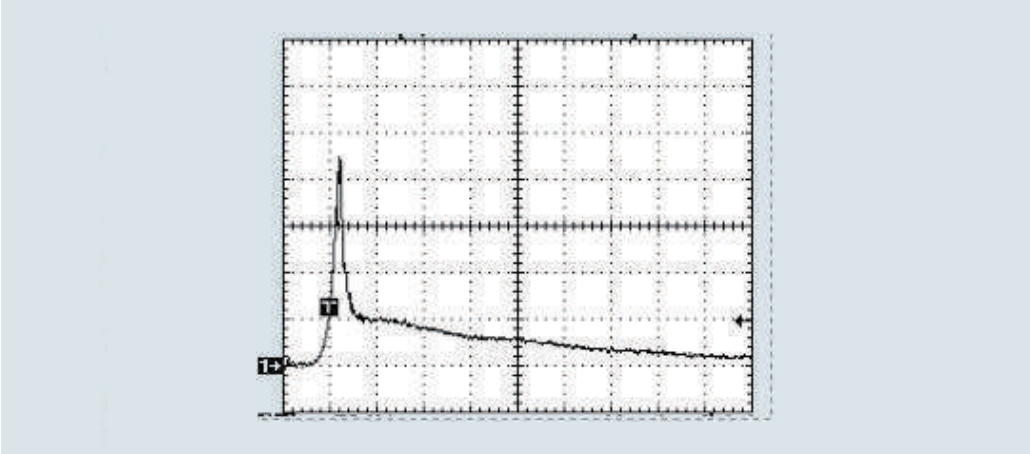

Operating characteristics of the discharge tube

Characteristics for each application element of SPD

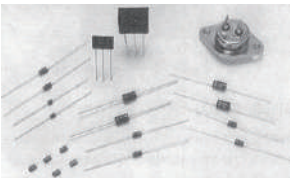

Silicon restriction element

- Zener diode => tunnel effect
- Avalanche diode => electronic breakdown effect
- Response Speed: Very fast (0.001~0.01㎲) compared with another element
- Features: The operating voltage is low, and the voltage of several Vs can be restricted.
- Application: It is a kind of Zener diodes, and the TVS (Transient Voltage Suppressor) element increasing the surge withstand rating is usually used.

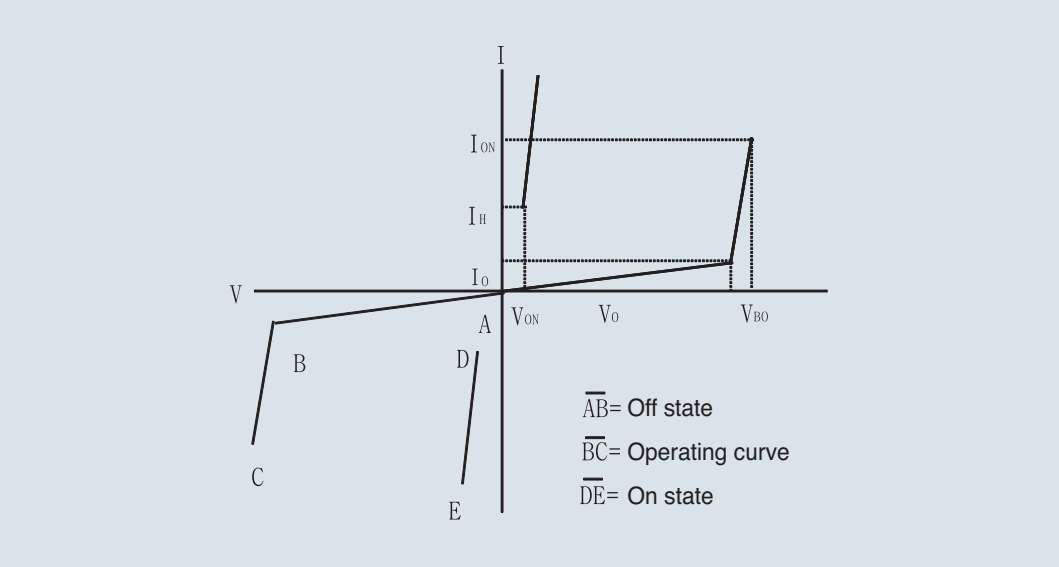

V-1 Characteristics of the silicon restriction element

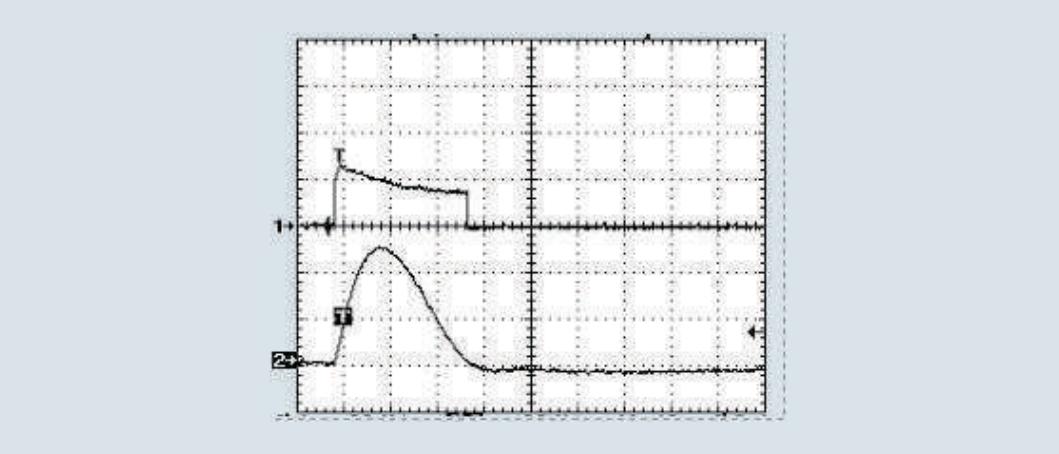

Operating characteristics of the silicon restriction element

Response characteristics for each application element of SPD

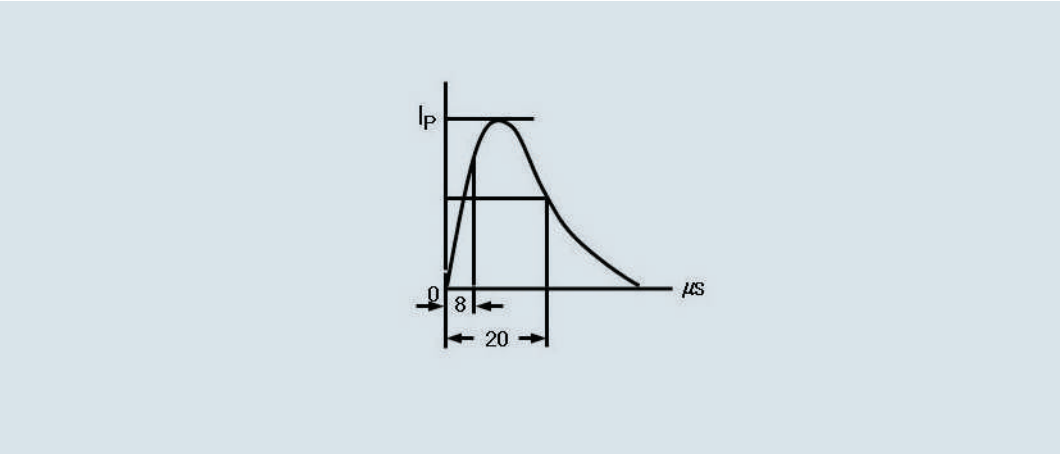

Surge current wave form

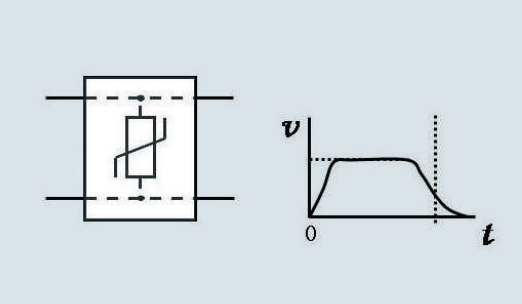

Response of the voltage restricting type SPD

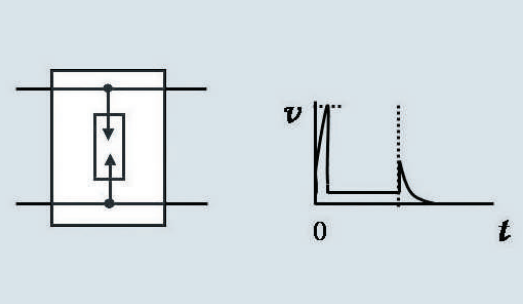

Response of the voltage switching type SPD

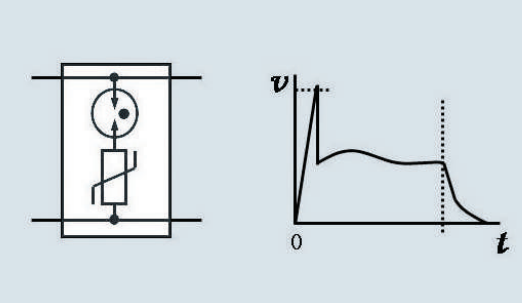

Response of the 1 port compound type SPD

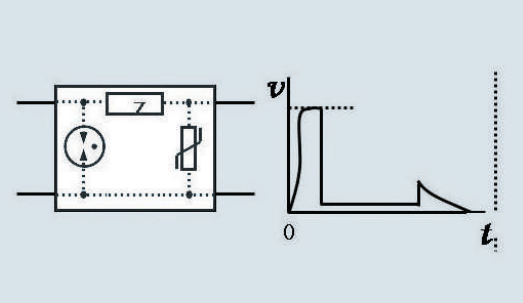

Response of the 2 port compound type SPD

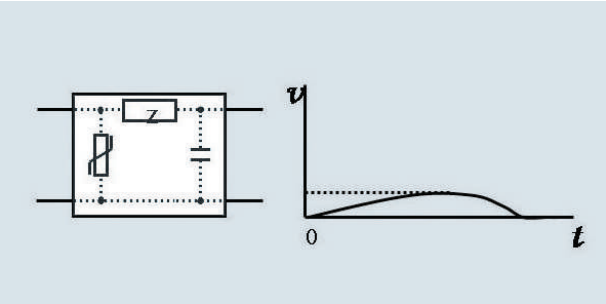

Response of the 2 port voltage switching type SPD
with the embedded

SPD terms

Surge Protective Device (SPD)

It is the device to limit the temporary overvoltage and the switching of the surge current. The device contains at least one nonlinear part.

Un, rated voltage

The rated voltage of the system to which the SPD is to be applied.
For power systems: 110V, 220V, 380V
For communication systems: 6V, 12V, 24V

Continuous operating current (Ic)

It is the current flowing through each protection mode of SPD when the maximum continuous operating current 0 is applied to each mode.

Maximum continuous operating voltage (Uc, MCOV)

It is equivalent to the maximum effective value or the direct current voltage and Rated system voltage steadily applied to the protection mode of SPD.

Voltage protection level (Up)

It is the parameter representing the performance characteristics of SPD limiting the terminal crossing voltage selected in the preferred value list. The value is greater than the highest value of the measured limiting voltage.

Measured limiting voltage

It is the maximum size of the voltage measured by crossing the SPD terminal when the impulse with the specific wave form and amplitude is applied.

Residual voltage (Ures)

It is the peak value of the voltage appearing between SPD terminals due to the passage of the discharge current.

Temporary overvoltage (Ut)

It is the maximum effective value or direct current voltage at which the protection device can withstand the voltage and which exceeds the Maximum continuous operating voltage (Uc).

Temporary overvoltage of the network (Utov)

The power frequency overvoltage, TOV, generated in the network in the specific position relatively for a long time is generated due to the internal defect of the LV system (Utov) or HV system (Utov).

Nominal discharge current (In)

The value of current which the SPD can withstand 15 times when an 8/20 wave-form current is applied through the SPD

Max. discharge current

The value of current which the SPD can withstand only once when an 8/20 wave-form current is applied through the SPD

Impulse current (Iimp)

It is the current peak value (I peak) and charge (Q) tested according to the test sequence of the operating test and is used for class I SPD classification.

Combination wave

It is generated in the generation device applying the 1.25/50 voltage impulse crossing the open circuit and the 8/20 current impulse in the short circuit. The voltage, current amplitude, and wave form delivered to SPD are defined with the generation device and with the impedance of SPD selecting surge.

8/20 current impulse

It is the current impulse with the 8μs virtual wave front time and the 20μs half value reaching time.

1.2/50 voltage impulse

It is the voltage impulse with the 1.2μs virtual wave front time (the elevation time from 10% of the peak value to 90%) and with the 50μs half value reaching time.

Thermal runaway

It is the operating condition inducing the accumulated elevation and exceeding the dissipation capacity of the container and access at the temperature at which the supply power dissipation of SPD leads to the malfunction of the internal element.

Thermal stability

If the SPD temperature is decreased as voltage is increased at the conditions of specific Maximum continuous operating voltage and of specific temperature conditions after the operating test increasing the temperature, SPD is stable to the heat.

SPD disconnector

It is the device blocking the SPD in the system in case of SPD malfunction.
It is installed to prevent the steady malfunction occurring in the system and visibly make an order for the SPD malfunction.

Response time

The time taken for the switching to begin when a surge voltage that is higher than Imax is engaged.

Protection mode

The surge suppression element of SPD is connected between line to line, line to earth, line to neutral, or neutral to earth, to suppress a surge between the two contacts. Such a connection route is called the protection mode.

Selection of SPD

SPD is selected by analyzing the risk level of the overvoltage and overcurrent due to the power line, thunder discharge, and ground power elevation and by considering the economic conditions. SPD with proper performance is selected through the sequential review according to the flow chart on the selection procedure presented in the following diagram.

Selection procedure

Maximum continuous operating voltage of SPD
Temporary overvoltage, rated system current, and maximum current

The Maximum continuous operating voltage and temporary overvoltage of SPD should be higher than the maximum operating voltage and temporary overvoltage.

Protection distance (Installation place of SPD)

Forecasted lifetime of the failure mode

Relationship between SPD and another device

Selection of the voltage protection level

- Surge rating of the device to be protected
- SPD used in the nominal voltage line of the system

Normal state

- Does the leaked current affect the human body?
- Does it break down another device?

Failure state

Does SPD affect another element such as a circuit disconnecting device?

Surge protection cooperation between SPD and the overcurrent protection device

- Does the overvoltage protection device operate in the rated system current?
- Is it permitted for the overcurrent protection device operate in the maximum current without failure?

Considerations when selecting SPD

The following matters should be considered when selecting and applying SPD.

Normal state

1. Installed in the location as close as possible from the facility to be protected Installed as closely as possible from the device or disconnector. The length of the conductor contacting SPD should be as short as possible.
2. Should be close to the SPD or device in the facility entrance.

Selection of the class based on the SPD installation place

- Class Ⅰ : The place with the serious thunderstroke damage where the thunderstroke current is partially dissipated
- Class Ⅱ : Installing the low voltage distribution panel and industrial distribution board with light thunderstroke damage
- Class Ⅲ : Installing the in-house plug socket and household distribution board with light thunderstroke damage

Selection of each SPD type

The box-type SPD or Din-rail SPD should be selected in consideration of the characteristics of the device to be protected and of maintenance conditions.

- Box-type SPD: It is the all-in-one type with the protection element, surge fuse, receiving box, and additional functions. Maintenance cost is high, but it is relatively safe.
- Din-rail SPD: The protection element, surge fuse, receiving box, and additional functions should be combined. It is possible to selectively replace the protection element.

Application based on the classification of the lightning protection zone

Classification of the lightning protection zone

The lightning protection zone (LPZ) should be spatially categorized, and the measure corresponding to the equipment history inside the individual space should be taken. The level of thunder threat to the structure defined in KSC IEC 62305-1 is represented by categorizing it into the external area such as LPZ0 and the internal areas such as LPZ 1, 2,..n. * KSC IEC62305-4

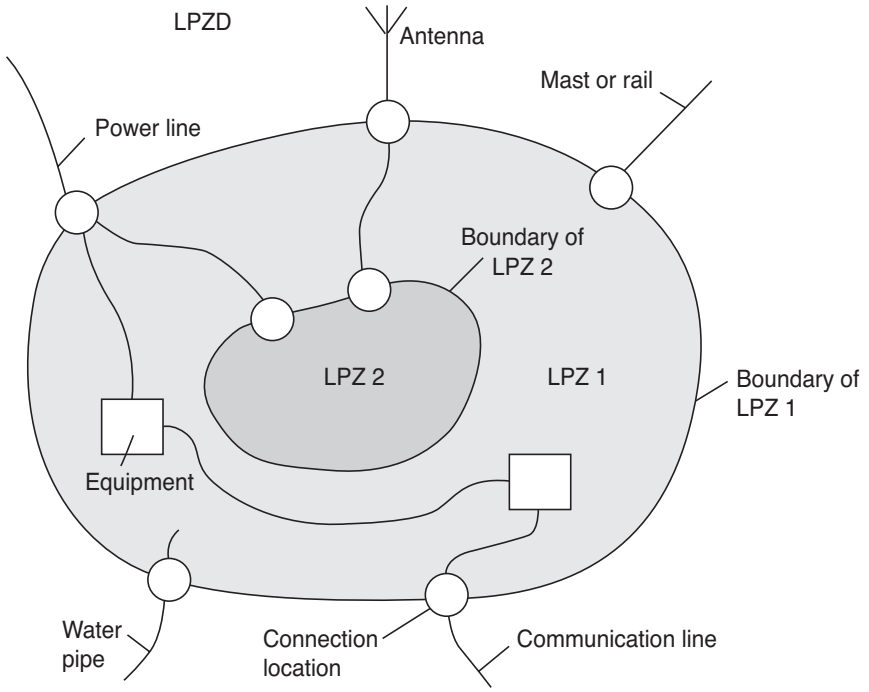

◯ Accessing the service facility directly or with the proper SPD

- LPZ 0A Area: It is the region with the threat of the thunder by the direct strike and of the lightning electromagnetic field. The whole or part of the thunder surge current tends to flow through the internal system.
- LPZ 0B Area: It is protected from the thunderstroke by the direct stroke of the lightning rod but is the region with the threat of the whole lightning electromagnetic field. The part of the lightning surge current tends to flow through the internal system.
- LPZ 1 Area: It is the region where the surge current is limited by the current classification in the boundary area or by the class I SPD. Space blocking is used to weaken the electromagnetic field caused by the thunderstroke.
- LPZ 2,...,n Areas: They are the regions where the surge current is limited more by the current classification by the class ii or III SPD of the boundary area. Additional space blocking is used to weaken the generation of the electromagnetic field further.

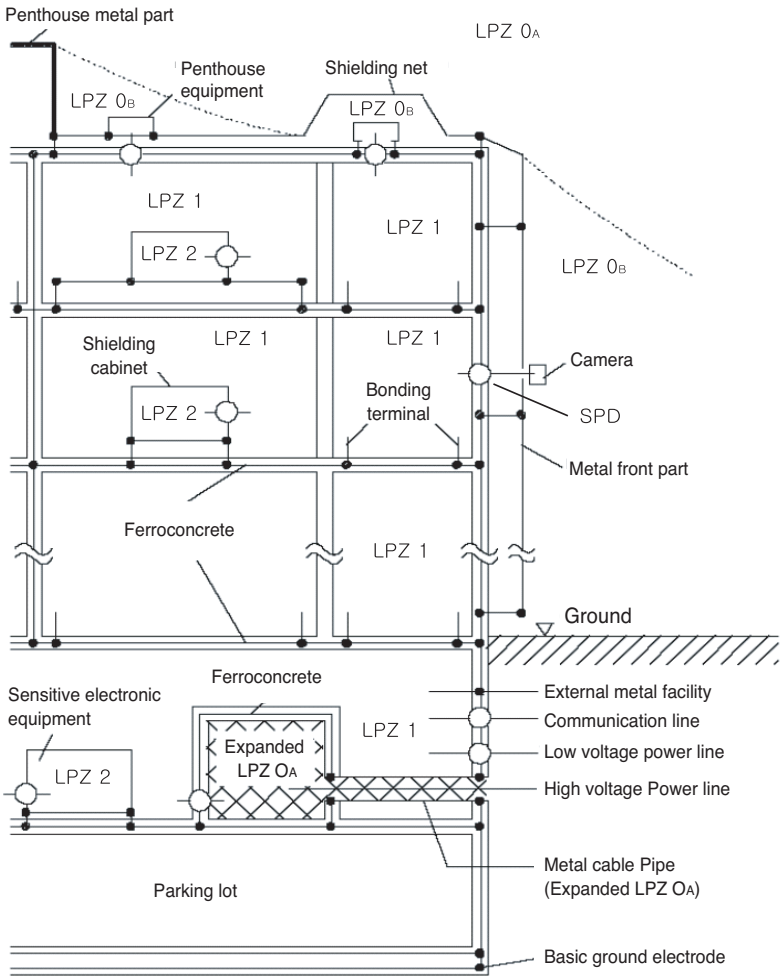

The area with the different strength of LEMP, the lightning prevention area, is determined for the electromagnetic field generated by LEMP not to have the failure occur in the facility or electronic or electrical device inside the building, and the potential is equalized by correctly connecting the metal thing, power line, communication line, and water pipe with the common ground in the boundary part of the lightning prevention area not to have the abnormal voltage generated inside the lightning prevention area. The separation of the external area (LPZ 0) from the internal area (LPZ 1) is clear, but the separation of the other lightning prevention areas is not clearly specified. The specific examples of the facilities inside the lightning prevention area are in the following table.

Lightning prevention area	Examples of specific target facilities
LPZ 0_A	Facilities outside the lightning rod protection range except for the outside lights (street lights and security lights).
LPZ 0_B	Facilities inside the lightning rod protection range out of outside facilities such as penthouse receiving (cubicle) facility, air conditioning outside device, airline failure light, and antenna.
LPZ 1	Facilities in the Inlet Part inside the Building: Receiving and transforming facilities, MDF, and weak electricity terminal box.
LPZ 2	Individual shielding area inside the building such as trunk line distribution board, common facility control panel, IS room, and disaster prevention room.

Note) LEMP: It is the thunder electromagnetic pulse. Out of the electromagnetic pulses (EMP), LEMP is the one caused by lightning, and NEMP is the one caused by nuclear explosion.

Application based on the classification of the lightning protection zone

Cooperation for protection for each stage with SPD

1) Measure to protect the internal system from surge Installing the cooperative SPD for all power and signal line (SPD with the protection voltage, location, and capacity well selected to minimize the system failure)

2) Lightning protection zone with multiple LPZs Installing SPD (Ex.: SPD I in LPZ1 and SPD II in LPZ2) corresponding to each LPZ to the inlet

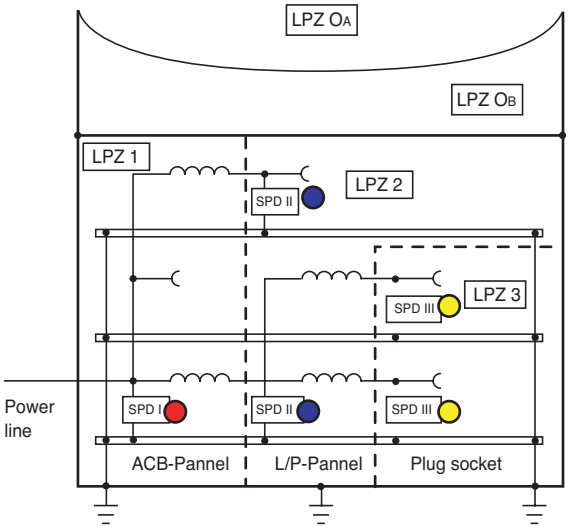

Example of the SPD application of the power

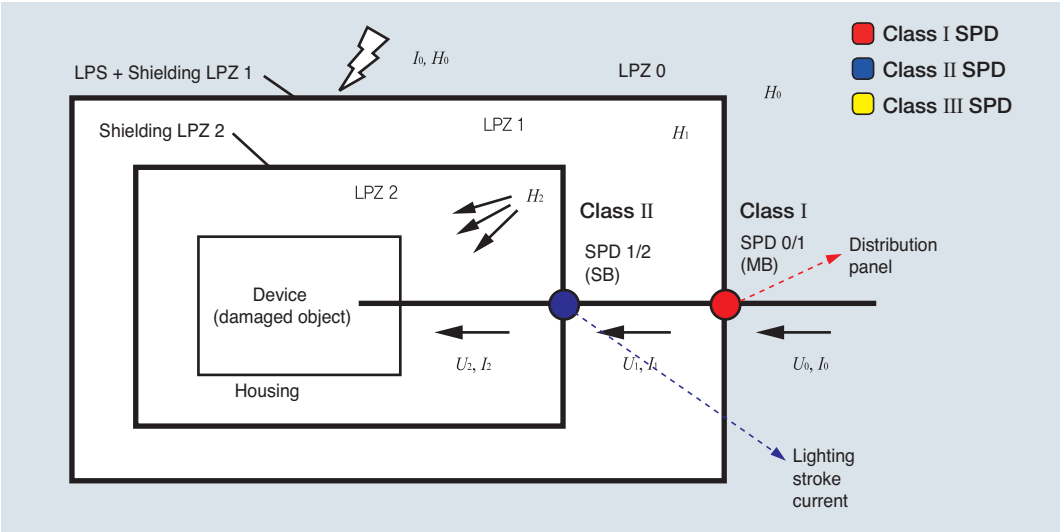

LPMS using the protection of the SPD cooperative with the space shielding object
-The device protected well from the conductive surge and from the radiating magnetic field-

1. SPD can be installed in the following point.
   - Boundary of LPZ 1 (Ex.: Main distribution panel MB / ACB-Panel) ----> Class I SPD
   - Boundary of LPZ 2 (Ex.: 2nd distribution panel SB / P-Panel) ----> Class II SPD
   - Equipment or the neighborhood of equipment (Ex.: Plug socket SA) ----> Class III SPD

Note) LPMS means the protection system for LEMP. * LEMP protection measures system

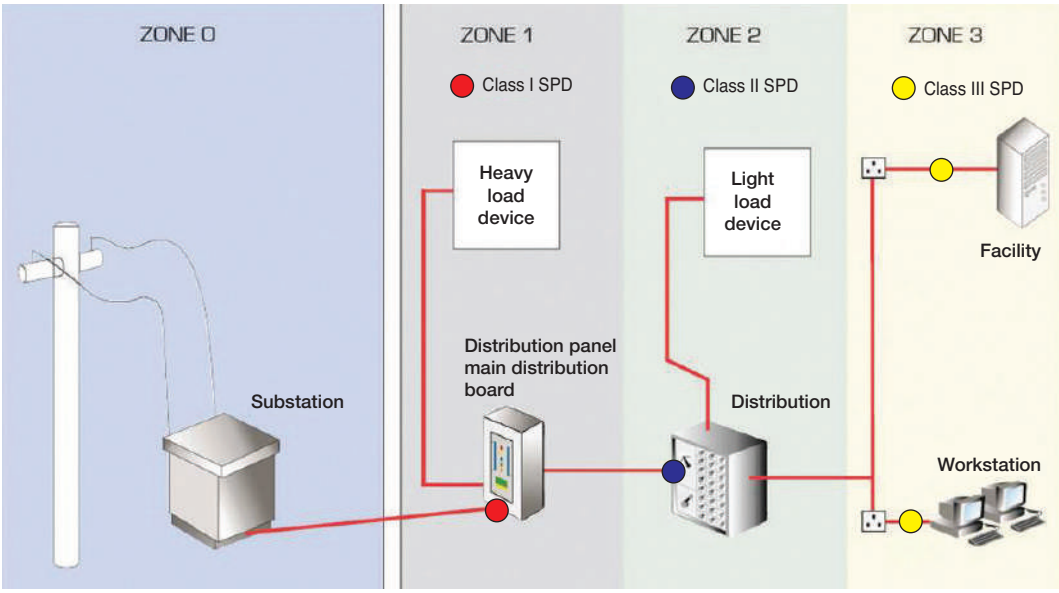

Note) If the heavy load device or light load device is 20m or farther from the SPD installation position in the unshielded vertical wiring distance, the additional protection should be considered.

Standard to select the SPD for each LPZ

LPZ 1 - The class I SPD with the impulse current with Iimp 15kA ~ 60kA on the basis of the 10/350μs wave form is applied.

LPZ 2 - The class II SPD with the maximum discharge current with Iimp 40kA ~ 160kA on the basis of the 8/20μs wave form is applied.

LPZ 3 - The class III SPD on the basis of the 1.2/50μs and 8/20μs combination wave form is applied.

Considerations during installation

SPD shows the difference in performance depending on the installation method. Therefore, SPD is installed in consideration of the following matters.

1) Protection and installation method

If SPD with sufficient surge rating is installed in the location close to the entrance of the distribution board for various wiring systems when the device or facility to be protected has sufficient overvoltage rating, most facilities can be protected.

2) Shuttle vibration phenomenon

If the device or facility to be protected is distant from SPD, the voltage that is about 2 times higher than the SPD limiting voltage is generated in the facility to be protected by the shuttle vibration of the incidence surge. The shuttle vibration of surge can be disregarded in case of the 10m or shorter wiring length, but the twofold or higher voltage can be generated in case of the 10m or shorter length so that the cooperation between the protection element inside the device or facility to be protected and SPD should be well accomplished.

3) Length of the connection line

In order to most effectively protect the overvoltage, it is necessary to shorten the length of the connection line for SPD wiring and to apply the wiring method restricting the induced voltage of the inductance of the connection line.

4) Necessity for additional protection

If the lightning surge voltage flowing into the device or facility to be protected is comparatively low, the protection effect is sufficient with the SPD installed in the building entrance. However, if the electromagnetic field is generated inside the building due to the lightning discharge and the very precise and sensitive facility such as computer or the facility to be protected is far from the SPD installed in the entrance, the additional protection device needs to be installed.

5) Selection of the SPD installation place based on the class test

It is very important to select the SPD with a suitable specification in consideration of the overvoltage generated in the lightning surge voltage or low voltage wiring system.

6) Concept of the protection area

Regarding the design or application of the proper surge protection, it is the most desirable that the protection area is classified into layers on the basis of the concept of protection area prescribed in IEC and that in case of installing SPD by segmenting the wiring system, SPD is installed in the boundary of the protection area.

Caution during installation

Be sure to read the user manual and safety instructions before using the product.
Please deliver the user manual to the end user or person in charge of maintenance.

⚠ Caution for safety

Correctly use it after thoroughly reading the caution for safety and the danger before handling, wiring, manipulation, repair, and checking. It is the important details on safety so that be sure to observe them.

⚠ **Danger: Infringing the instructions results in death or serious injury.**

⚠ **Caution: Infringing the instructions results in light injury or physical damage.**

⚠ Danger

1. Be sure to turn off the upper breaker before installing the product. There is the danger of electric shock during installation.
2. Be careful not to contact the open part of the terminal. It can cause the accident of electric shock or short circuit.
3. Be sure not to make the part of the body contact the two exposed hot-lines at the same time. It may cause the electric shock.

⚠ Caution

1. Be sure to read the caution before installing the product and install according to instructions.
2. There is the danger of malfunction or accident occurrence due to incorrect installation. The qualified person (electric engineer) should install and repair the surge protective device.
3. Please avoid installation in the environment of rain, oil, dust, and direct light.
   There is the danger of electric shock, leak, short circuit, fire, and malfunction.
   1) Operating Temperature: -40~70℃
   2) Relative Humidity: 45~85%
   3) Altitude: 2000m or lower
   4) There should be no abnormal vibration and shock, excessive vapor, oil, smoke, dust, corrosive gas, and flammable gas.
4. Please connect it to the power with right Product rating. Improper rating causes malfunction or failure.
5. As the insufficient fastening torque of a terminal causes overheat or fire, please refer to the fastening torque specified in the user manual for each product to correctly fix the terminal.
   * As for the details, refer to the mounting method for each device type.
6. Install the connection conductor and each phase in parallel when mounting a terminal. There is the danger of the short circuit accident between phases.
7. The insulation resistance measurement and withstand voltage test between phases cannot be performed. In case of doing the above test between the lines of the circuit, do it after detaching the product from the circuit. It may cause a failure.
8. Be sure to ground the earth terminal of an electric device.
9. Electric shock or fire can occur.
10. Do not perform the unauthorized modification.
11. Please handle the disposal of products according to the Waste Management Law.

Memo

Memo

FUTURING SMART ENERGY

We open up a brighter future through
efficient and convenient energy solutions.

Safety Instructions

- For your safety, please read user's manual thoroughly before operating.
- Contact the nearest authorized service facility for examination, repair, or adjustment.
- Please contact qualified service technician when you need maintenance.
  Do not disassemble or repair by yourself!
- Any maintenance and inspection shall be performed by the personnel having expertise concerned.

- According to The WEEE Directive, please do not discard the device with your household waste.

LS ELECTRIC

www.ls-electric.com

■ Headquarter
127 LS-ro (Hogye-dong) Dongan-gu, Anyang-si, Gyeonggi-Do, 14119, Korea

■ Seoul Office
LS Yongsan Tower, 92, Hangang-daero, Yongsan-gu, Seoul, 04386, Korea
Tel. 82-2-2034-4916, 4684, 4429

■ Overseas Subsidiaries
- LS ELECTRIC Japan Co., Ltd. (Tokyo, Japan)
  Tel: 81-3-6268-8241 E-Mail: japan@ls-electric.com
- LS ELECTRIC (Dalian) Co., Ltd. (Dalian, China)
  Tel: 86-411-8730-5872 E-Mail: china.dalian@lselectric.com.cn
- LS ELECTRIC (Wuxi) Co., Ltd. (Wuxi, China)
  Tel: 86-510-6851-6666 E-Mail: china.wuxi@lselectric.com.cn
- LS ELECTRIC Vietnam Co., Ltd. (Hanoi, Vietnam)
  Tel: 84-222-2221-110 E-Mail: vietnam@ls-electric.com
- LS ELECTRIC Middle East FZE (Dubai, U.A.E.)
  Tel: 971-4-886-5360 E-Mail: middleeast@ls-electric.com
- LS ELECTRIC Europe B.V. (Hoofddorp, Netherlands)
  Tel: 31-20-654-1424 E-Mail: europartner@ls-electric.com
- LS ELECTRIC America Inc. (Chicago, USA)
  Tel: 1-800-891-2941 E-Mail: sales.us@lselectricamerica.com
- LS ENERGY SOLUTIONS LLC (Charlotte, USA)
  Tel: 1-704-587-4051 E-Mail: cmfeldman@ls-es.com
- LS ELECTRIC Türkiye Co., Ltd. (Istanbul, Türkiye)
  Tel: 90-212-806-1252 E-Mail: turkiye@ls-electric.com
- LS ELECTRIC IBERIA S.L.U. (Madrid, Spain)
  Tel: 34-910-28-02-74 E-Mail: iberia@ls-electric.com

■ Overseas Branches
- LS ELECTRIC Tokyo Office (Japan)
  Tel: 81-3-6268-8241 E-Mail: tokyo@ls-electric.com
- LS ELECTRIC Beijing Office (China)
  Tel: 86-10-5095-1631 E-Mail: china@lselectric.com.cn
- LS ELECTRIC Shanghai Office (China)
  Tel: 86-21-5237-9977 E-Mail: china@lselectric.com.cn
- LS ELECTRIC Guangzhou Office (China)
  Tel: 86-20-3818-2883 E-Mail: china@lselectric.com.cn
- LS ELECTRIC Chengdu Office (China)
  Tel: 86-28-8670-3201 E-Mail: china@lselectric.com.cn
- LS ELECTRIC Qingdao Office (China)
  Tel: 86-532-8501-2065 E-Mail: china@lselectric.com.cn
- LS ELECTRIC Nanjing Office (China)
  Tel: 86-25-8467-0005 E-Mail: china@lselectric.com.cn
- LS ELECTRIC Bangkok Office (Thailand)
  Tel: 66-90-950-9683 E-Mail: thailand@ls-electric.com
- LS ELECTRIC Jakarta Office (Indonesia)
  Tel: 62-21-2933-7614 E-Mail: indonesia@ls-electric.com
- LS ELECTRIC Moscow Office (Russia)
  Tel: 7-499-682-6130 E-Mail: info@lselectric-ru.com
- LS ELECTRIC America Western Office (Irvine, USA)
  Tel: 1-949-333-3140 E-Mail: america@ls-electric.com
- LS ELECTRIC India Office (India)
  Tel: 91-80-6142-9108 E-Mail: Info_india@ls-electric.com
- LS ELECTRIC Singapore Office (Singapore)
  Tel: 65-6958-8162 E-Mail: singapore@ls-electric.com
- LS ELECTRIC Italy Office (Italy)
  Tel: 39-030-8081-833 E-Mail: italia@ls-electric.com

2022. 12

Specifications in this catalog are subject to change without notice due to continuous product development and improvement.

©2018. 1 LS ELECTRIC Co., Ltd. All rights reserved. / English (07) 2022. 12 Staffcom